2009

STANDARD TIMBER FINISHED SIZES AND PROFILES

WOOD
NATURALLY BETTER

TABMA®
QUALITY • SERVICE • INTEGRITY

DISCLAIMER: Although TABMA has taken due care in preparing the information in this document, it is intended merely as a guide to assist industry participants. In no way is TABMA warranting the accuracy or completeness of the information. Nor is TABMA making any representation on the suitability, safety, quality or availability of any product referred to in this document. In making any decisions about products, based on the information in this document, you should make your own independent enquiries in relation to the suitability, safety, quality and/or availability of the products for your intended use.

Acknowledgements

This publication was formulated after lengthy consultation with industry together with input from several industry associations and many producers, suppliers, wholesalers and merchants.

Forest and Wood Products Australia Limited is the major sponsor of this publication.

Published by the Timber & Building Materials Association (Aust) Ltd. ABN 12 000 045 956
Suite 603, Level 6, 486 Pacific Highway, St Leonards, NSW 2065 Australia.
PO Box 518, St Leonards NSW 1590 Australia
Telephone (02) 9277 3100 Fax (02) 9437 1222 info@tabma.com.au www.tabma.com.au

© Copyright

Forest & Wood Products Australia
Knowledge for a sustainable Australia

TABMA
QUALITY • SERVICE • INTEGRITY

Introduction

The principal objective of this document is to describe to the building industry, specifiers, renovators and end-users standard timber sizes and moulding profiles that are commonly available. The document can be used by producers, suppliers and importers to encourage uniformity in supply to the industry. The profiles have been drawn to scale and, wherever possible, to actual size. It should be noted when printing profiles on a laser or other office printer that complete accuracy cannot be achieved with this technology and small variations should be allowed for.

For information on availability please visit **www.tabma.com.au** to find your closest TABMA member.

WOOD
NATURALLY BETTER

© Copyright FWPA. Published by TABMA 01/09

Contents

Page

Industry Standard Timber Sizes....5
Engineered Wood Products....8
Architraves and Skirting....10
Sundry Mouldings....17
Protective Coated – Treated H3 Finger Jointed Pine – Exterior Use....27
Sundry Treated Pine H3 Products – Exterior Use....36
External Wall Cladding....39
Flooring and Decking....48
Internal Lining....55
Internal Staircase Components....61
Door Jambs, Door and Casement Framing, Casement Sills....64
Detail of Box Frame Material 38mm Sash Stock....70
Detail of Box Frame Material 44mm Sash Stock....75
Treated Timber Hazard Level Guide....82
Glossary of Timber Terms....85
Timber Durability....89
Fire Resistant Timbers....90
Timber Hardness....91

© Copyright FWPA. Published by TABMA 01/09

Recommended Finished Timber Sizes

Table 1
Species include Finger Jointed Pine (unprimed, treated and primed), Pacific Maple, Oregon, Victorian Ash, Tasmanian Oak, Hardwood, Merbau Western Red Cedar and other species Kiln dried

Width (mm)	Thickness (mm)							
	12	18	30	42	66	90	116	138
12	12	18	30	42	66	90		
18	12	18	30	42	66	90	116	138
30	12	18	30	42	66	90	116	138
42	12	18	30	42	66	90	116	138
66	12	18	30	42	66	90	116	138
90	12	18	30	42	66	90	116	
92	12	18	30	42				
110	12	18			66	90		
116	12	18	30	42	66	90	116	138
138	12	18	30	42	66	90		138
165		18						
185		18	30	42	66	90		
230		18	30	42	66	90		
280		18	30	42	66	90		

Notes:
1. All dressed timber will be square edged unless noted below.
2. 92mm Queensland only (Finger Jointed).
3. Treated Pine Dressed all round primed all pencil round 2.0mm radius
4. Pacific Maple, Oregon, WRC, Tasmanian Oak, etc, will be 235mm and 285mm..
5. Some species may have up to 1.0mm variation.
6. Finger Jointed Pine will be 11.0mm (rather than 12mm).
7. Special sizes can be produced subject to "Special Order".

Table 2
Radiata Pine
Kiln dried
Dressed all round

Width (mm)	Thickness (mm)						
	12	19	35	42	45	70	90
12	12	19		42		70	90
19	12	19	35	42		70	90
35				42			
42	12	19	35	42			
45			35			70	90
70	12	19	35		45	70	90
90	12	19	35		45	70	90
120		19	35		45		
140	12	19	35		45		
170		19					
190		19	35		45		
240		19	35		45		
290		19	35		45		

© Copyright FWPA. Published by TABMA 01/09

Recommended Finished Timber Sizes

Tables 1 and 2 are finished sizes relevant to the Australian building industry, although comprehensive this does not describe exact market availability

Table 1

Pine and Hardwood Kiln dried Solid, Gauged

Width (mm)	Thickness (mm)			
	35	45	70	90
35		45	70	90
45			70	90
70	35	45	70	90
90	35	45	70	90
120	35	45		
140	35	45	70	
170	35	45		
190	35	45	70	
220	35	45		
240	35	45	70	
270	35	45		
290	35	45	70	

Notes: 1 Incorporates Radiata and kiln dried Hardwood in all relevant F & MGP strength ratings, treated or untreated.

Table 2

Treated Pine Primed H3 Finger Jointed and Laminated includes F7, GL8 & GL10 Kiln dried

Width (mm)	Thickness (mm)		
	30	42	65
66	30	42	
90	30	42	
138	30	42	
140			65
180			65
185		42	
230		42	
240			65
280		42	65

F8 Treated Primed Pine Posts

	88	112	135	185
88	88			
112		112		
135			135	
185				185

Notes:
1 Treated Pine Primed Posts will have 2.0 mm radius pencil round.
2 Some sizes and grades are subject to availability at the time of order.
3 The above table and notes are based on the common sizes and grades available.
4 65mm only available in GL8 and GL10.
5 The above are suitable for above ground only.

© Copyright FWPA. Published by TABMA 01/09

Sawn Timber Sizes

Recommended Nominal Timber Sizes (unseasoned)

Width (mm)	Thickness (mm)									
	25	38	50	75	100	125	150	200	250	300
50	25	38	50							
75	25	38	50	75						
100	25	38	50	75	100					
125	25	38	50	75	100	125				
150	25	38	50	75	100	125	150			
175	25	38	50	75	100	125	150			
200	25	38	50	75	100	125	150	200		
225	25	38	50	75	100	125	150	200		
250	25	38	50	75	100	125	150	200	250	
300	25	38	50	75	100	125	150	200	250	300

Notes: 1 Refer to the relevant standards for each species.
2 The above are common sizes; other sizes are available on request.
3 Fine sawn Oregon as per the dressed sizes.

© Copyright FWPA. Published by TABMA 01/09

Laminated Veneer Lumber (LVL)

Generally the sizes are as shown – some producers may vary.

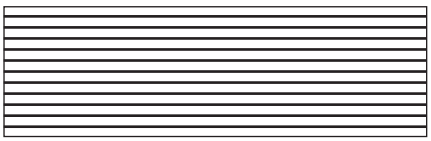

Laminated Veneer Lumber (LVL)

Sizes (mm)	36	45	63	75
95	36	45	63	–
130	36	45	63	–
150	36	45	63	75
170	36	45	63	–
200	36	45	63	–
240	36	45	63	–
300	–	45	63	75
360	–	45	63	–
400	–	45	63	75
450	–	–	63	
525	–	–	–	75

Notes: 1 Supplied untreated, treated H2 or H3.
2 Lengths to 13.2m in increments of 300mm
3 Refer to suppliers' span tables and strength ratings.
4 Interior only

Bearers and Joists (LVL) H2 Treated

Producer 1	100 x 65	LVL Bearer
	100 x 47	LVL Joist
	90 x 63	LVL Bearer
	90 x 45	LVL Joist
Producer 2	100 x 75	LVL Bearer
	100 x 45	LVL Joist

Notes:
- You may need to check with your supplier for strength ratings and span tables
- Lengths to 7.2m and 9.0m

Note: ***H2 is not to be used outside or exposed to the weather***
H3 is not recommended for use in exposed external applications unless installed with effective moisture protection

© Copyright FWPA. Published by TABMA 01/09

I-Joists

Generally the sizes are as shown – some producers may vary.

Producer 1	200 x 44	300 x 51
	240 x 40	300 x 90
	240 x 51	360 x 58
	240 x 90	360 x 90
	300 x 40	400 x 90
Producer 2	200 x 45	300 x 63
	240 x 45	300 x 90
	240 x 63	360 x 63
	240 x 90	360 x 90
	300 x 45	400 x 90
Producer 3	200 x 90	
	245 x 90	
	300 x 90	
	360 x 90	
Producer 4	200 x 45	300 x 51
	240 x 45	300 x 90
	240 x 51	360 x 63
	249 x 90	360 x 90
	300 x 45	400 x 90

I Joist

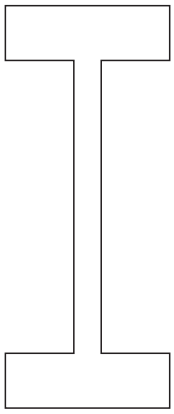

Notes:
1. Supplied H2 treated or untreated.
2. Use internally only
3. Lengths to 13.2m in increments of 300mm.
4. You may need to check with your supplier for strength ratings and span tables

© Copyright FWPA. Published by TABMA 01/09

Bullnose

AS1.1 138 x 18

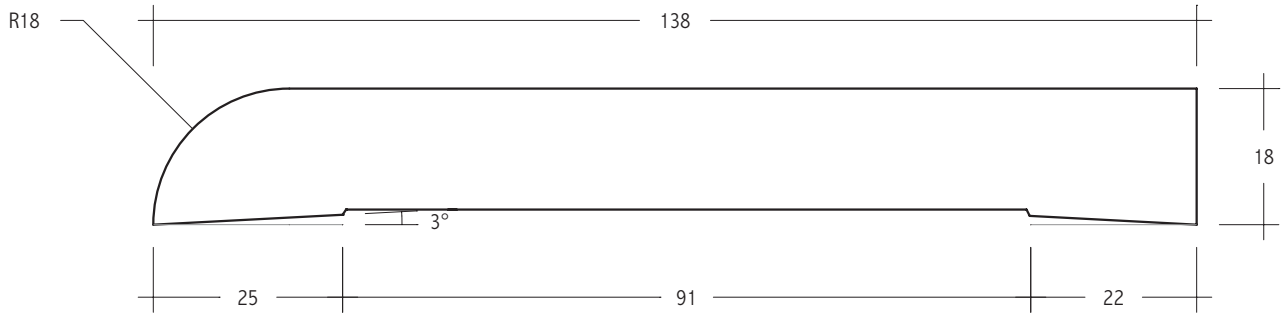

AS1.2 90 x 18

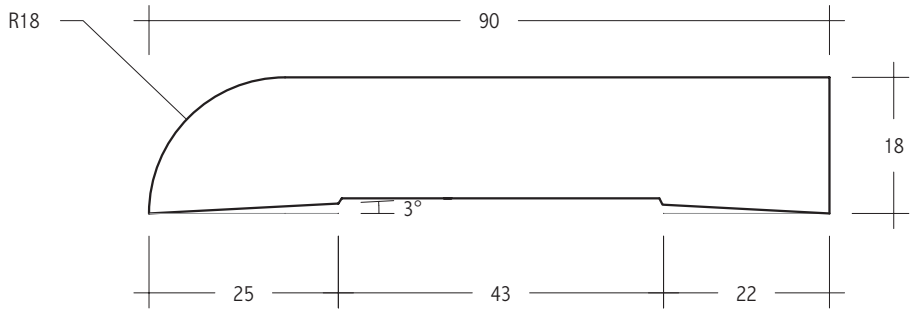

AS1.3 66 x 18

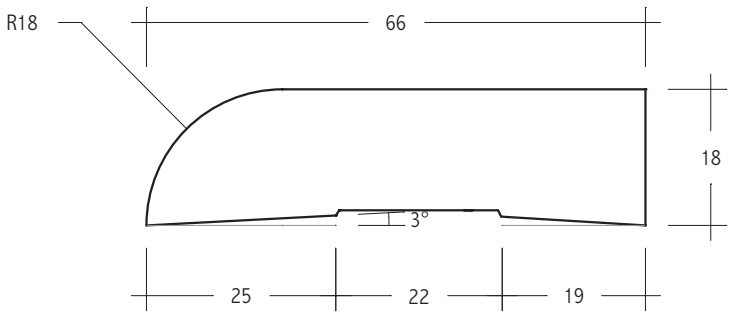

AS1.4 42 x 18

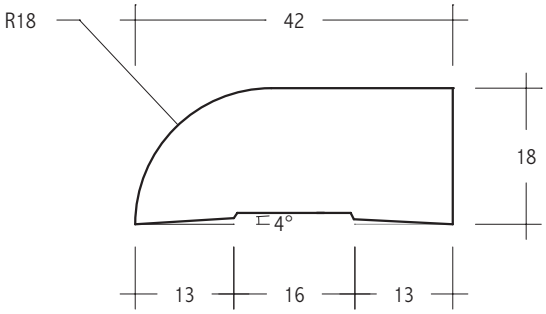

© Copyright FWPA. Published by TABMA

ACTUAL SIZE TO SCALE 01/09

WOOD NATURALLY BETTER

Colonial

AS2.1 138 x 18

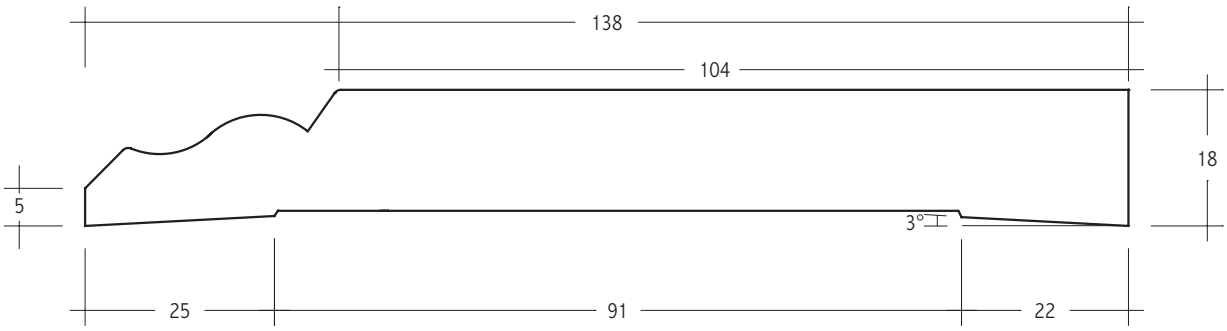

AS2.2 90 x 18

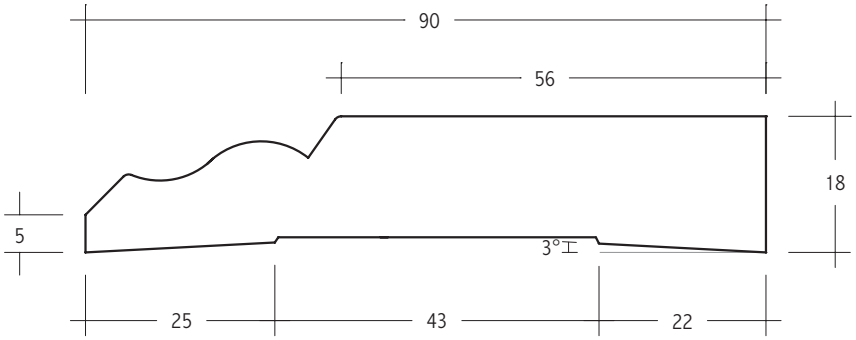

AS2.3 66 x 18

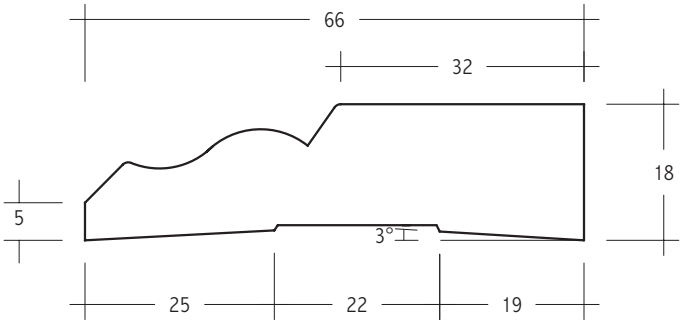

AS2.4 42 x 18

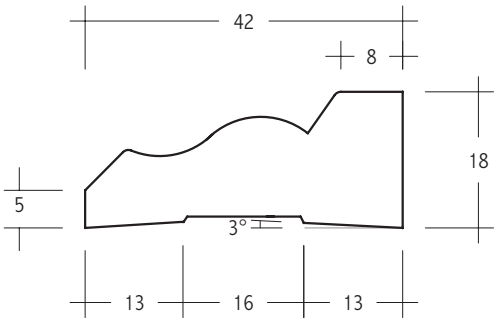

© Copyright FWPA. Published by TABMA

ACTUAL SIZE TO SCALE 01/09

WOOD NATURALLY BETTER

Bevel

AS3.1 138 x 18

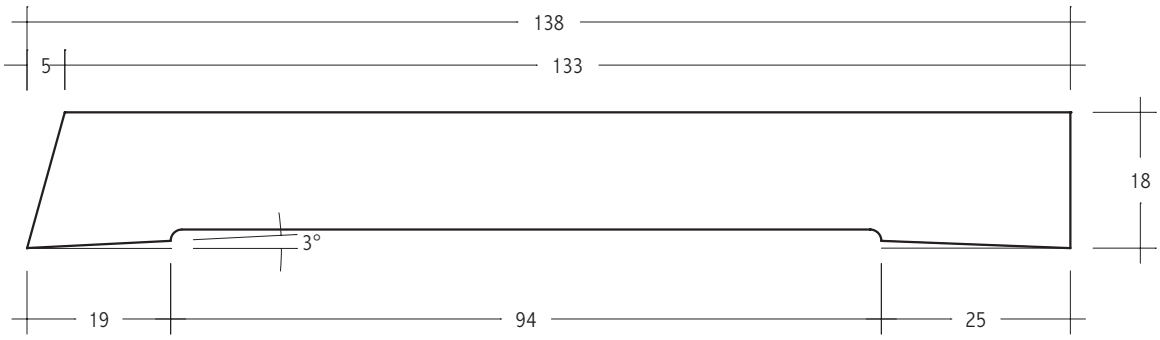

AS3.2 90 x 18

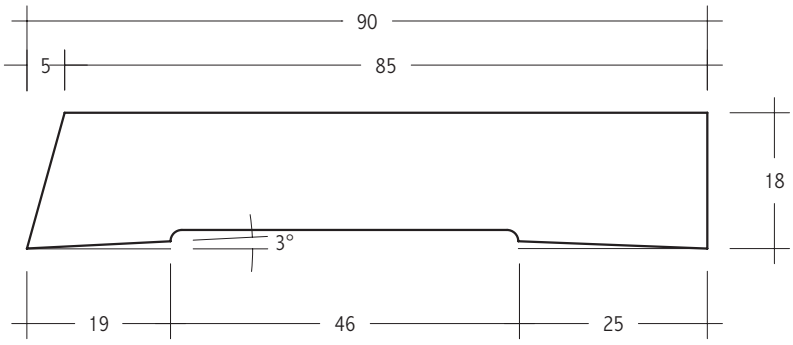

AS3.3 66 x 18

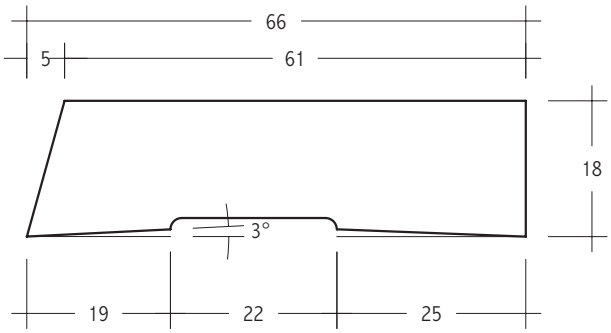

AS3.4 42 x 18

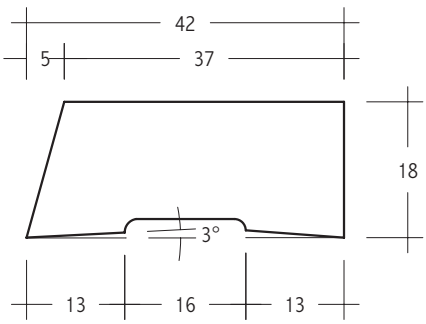

© Copyright FWPA. Published by TABMA

Half Splayed Type A

AS4.1 138 x 18

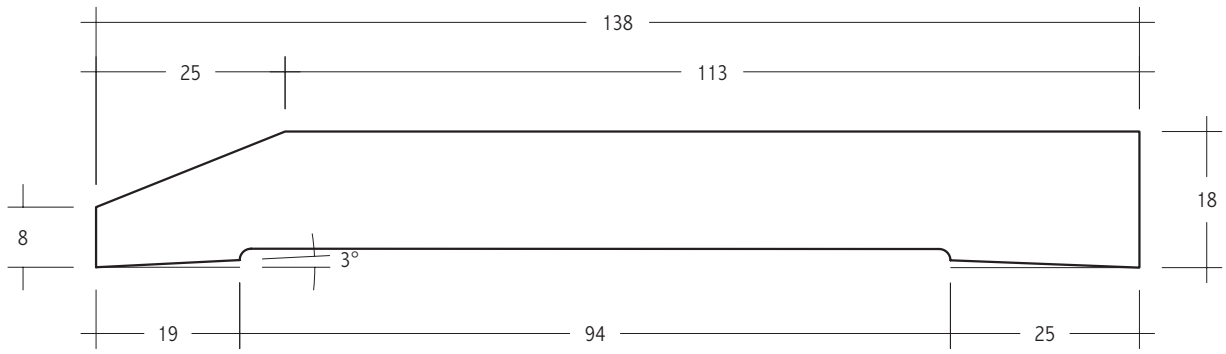

AS4.2 90 x 18

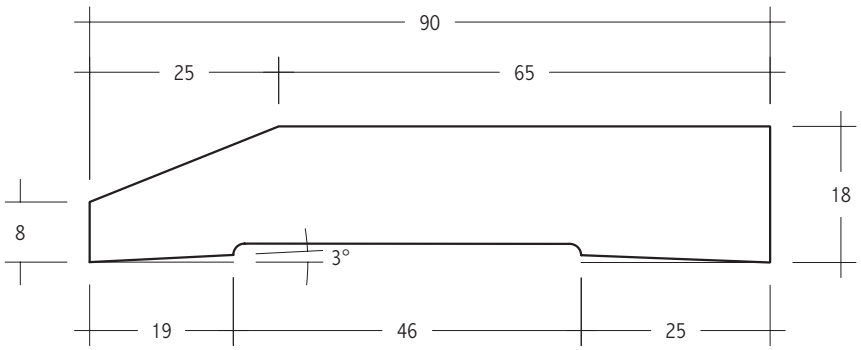

AS4.3 66 x 18

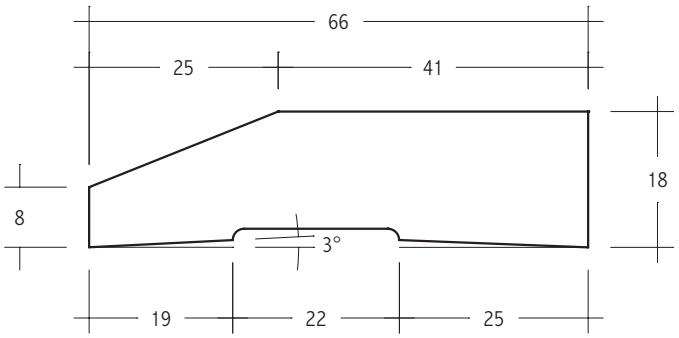

AS4.4 42 x 18

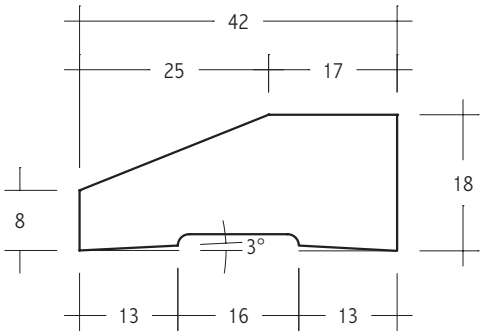

© Copyright FWPA. Published by TABMA ACTUAL SIZE TO SCALE 01/09

WOOD NATURALLY BETTER

Half Splayed Type B

AS5.1 138 x 18

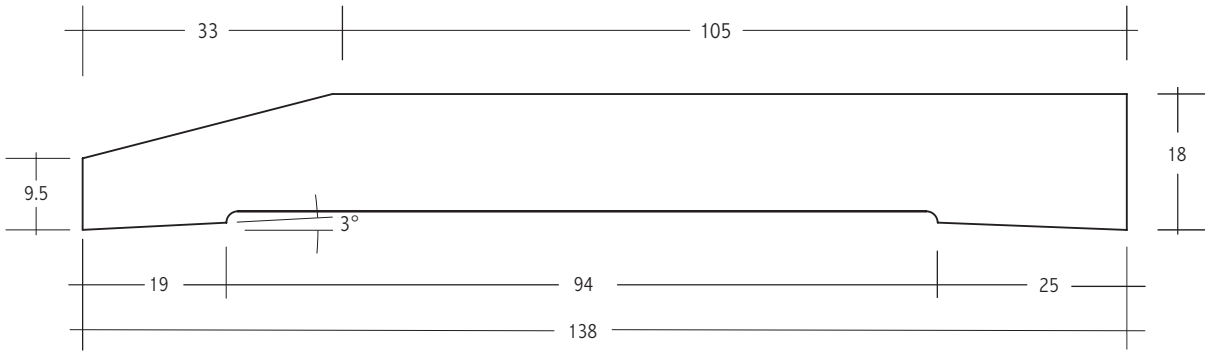

AS5.2 90 x 18

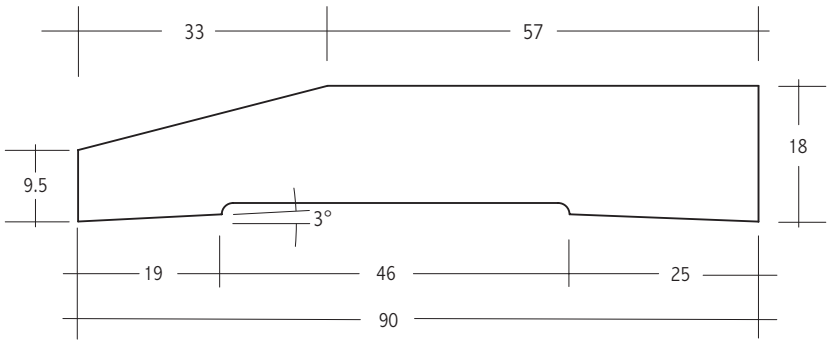

AS5.3 66 x 18

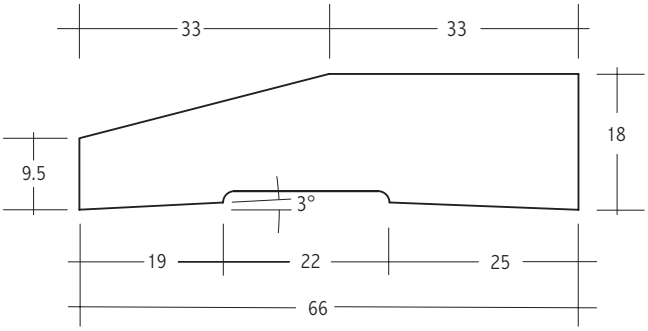

© Copyright FWPA. Published by TABMA ACTUAL SIZE TO SCALE 01/09

Full Splayed

AS6.1 138 x 18

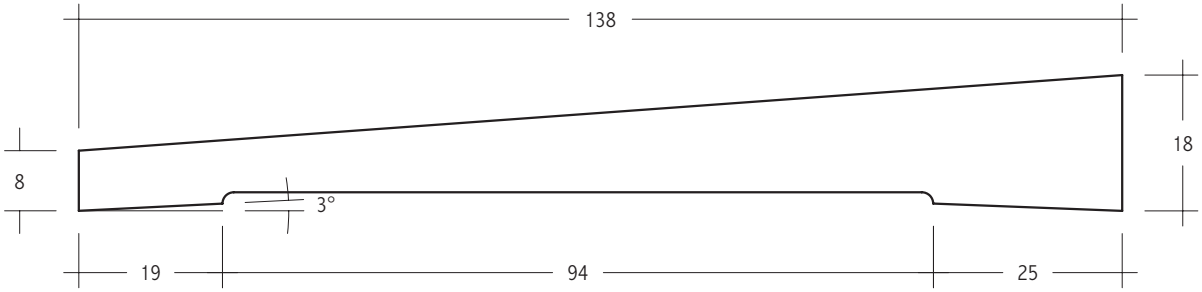

AS6.2 90 x 18

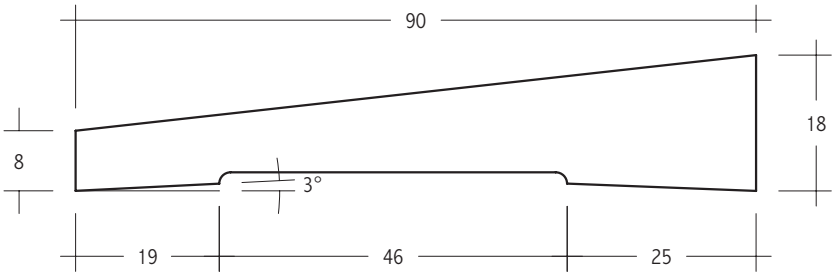

AS6.3 66 x 18

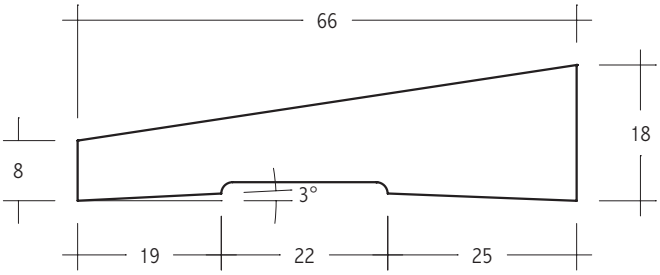

AS6.4 42 x 18

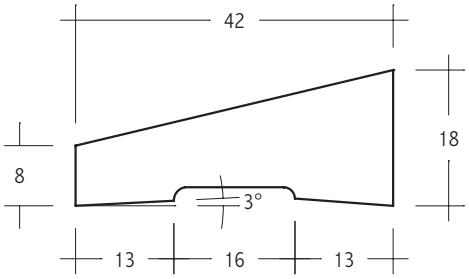

© Copyright FWPA. Published by TABMA

ACTUAL SIZE TO SCALE 01/09

WOOD NATURALLY BETTER

Pencil Round

AS7.1 138 x 18

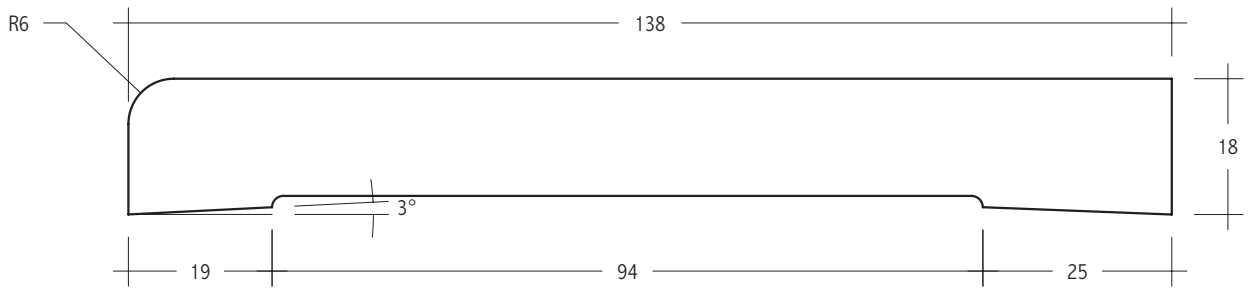

AS7.2 90 x 18

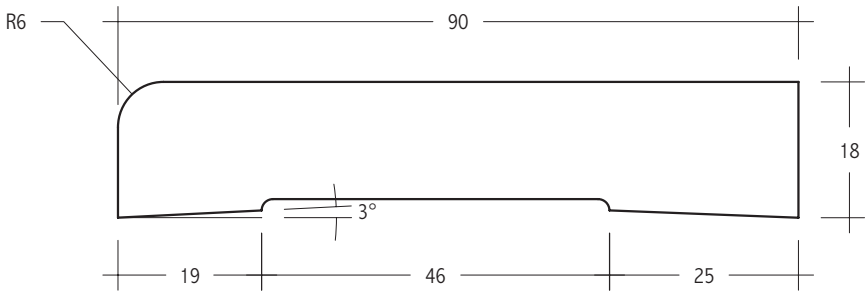

AS7.3 66 x 18

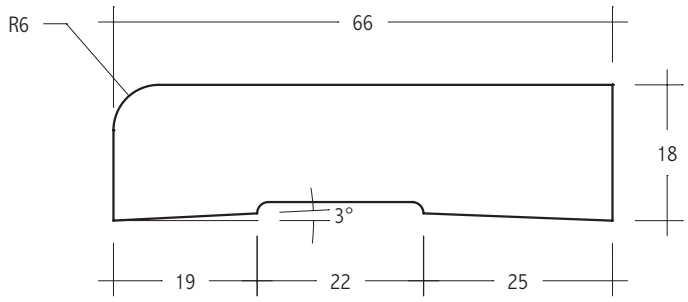

AS7.4 42 x 18

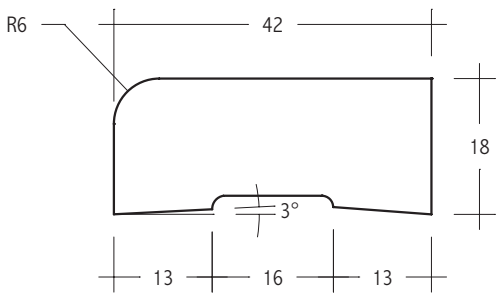

© Copyright FWPA. Published by TABMA ACTUAL SIZE TO SCALE 01/09

Quad

SM1.1 41

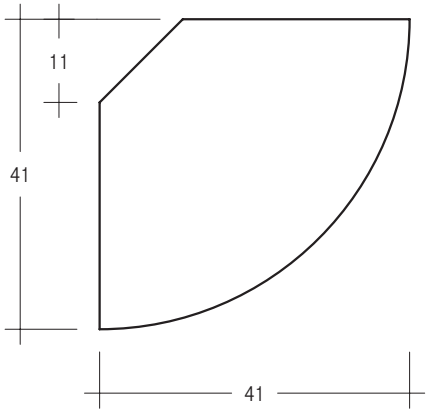

SM1.4 19

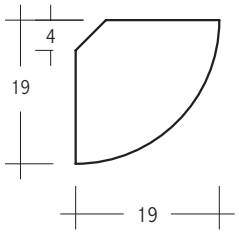

SM1.2 30

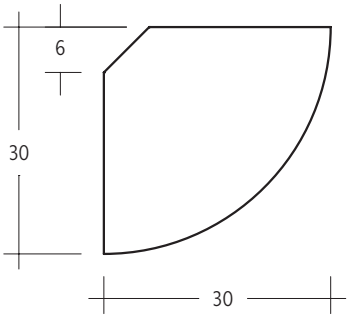

SM1.5 13

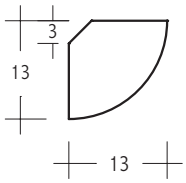

SM1.5 10

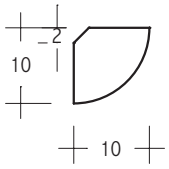

SM1.3 23

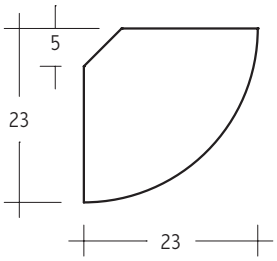

© Copyright FWPA. Published by TABMA

ACTUAL SIZE TO SCALE 01/09

WOOD NATURALLY BETTER

Scotia

SM2.1 42

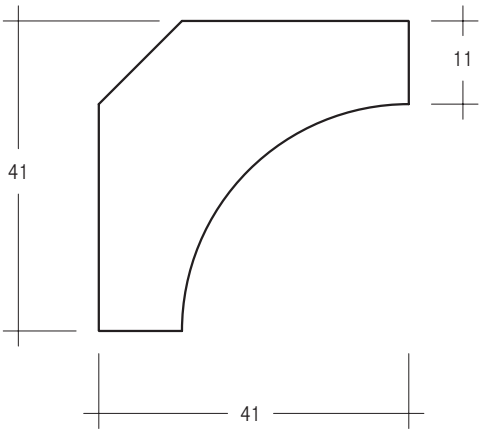

SM2.4 18

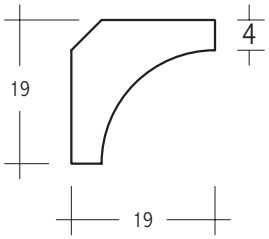

SM2.2 30

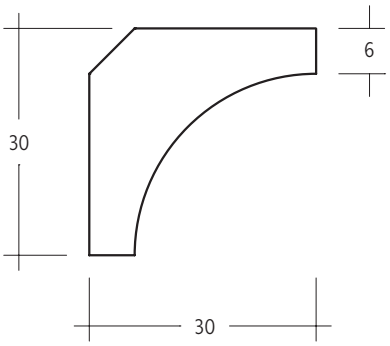

SM2.5 13

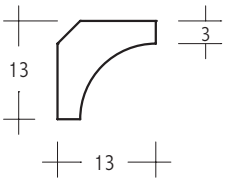

SM2.3 23

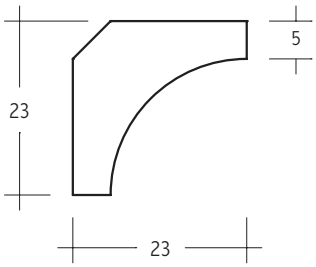

SM2.6 10

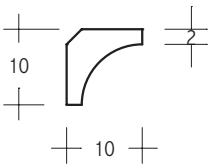

© Copyright FWPA. Published by TABMA

Ovolo

SM3.1 42

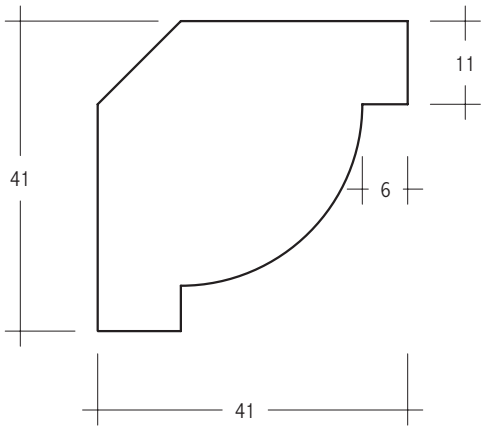

SM3.4 18

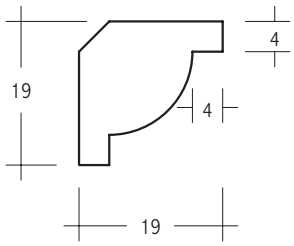

SM3.2 30

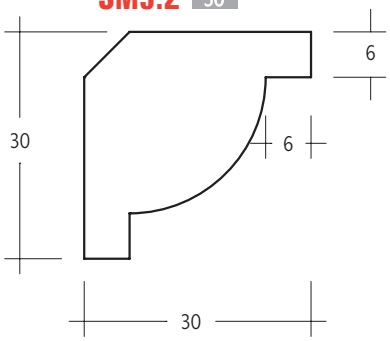

SM3.5 13

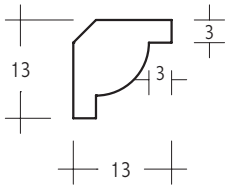

SM3.6 10

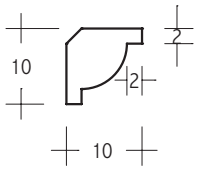

SM3.3 23

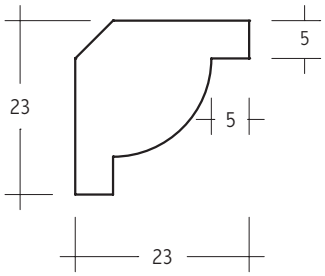

© Copyright FWPA. Published by TABMA

ACTUAL SIZE TO SCALE 01/09

WOOD NATURALLY BETTER

38mm Nosing Full

SM4.1 90 x 30

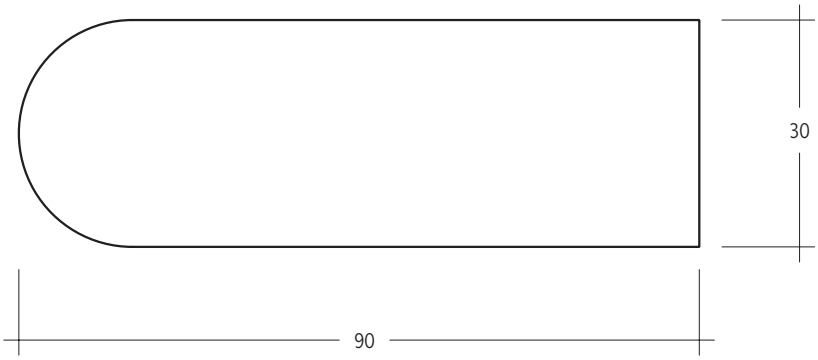

SM4.2 66 x 30

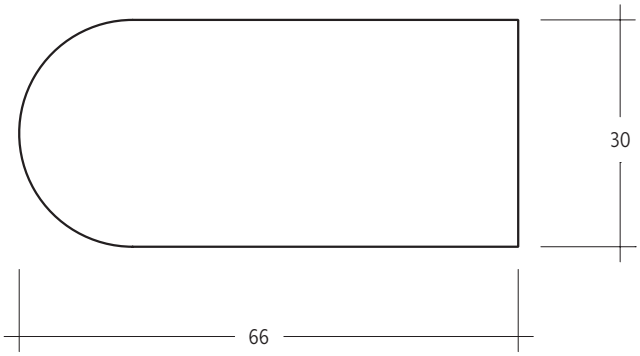

SM4.3 42 x 30

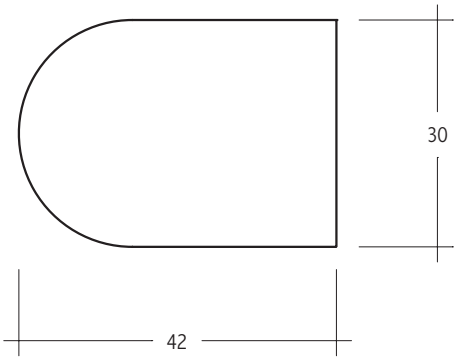

© Copyright FWPA. Published by TABMA

38mm Nosing Splayed

SM5.1 90 x 30

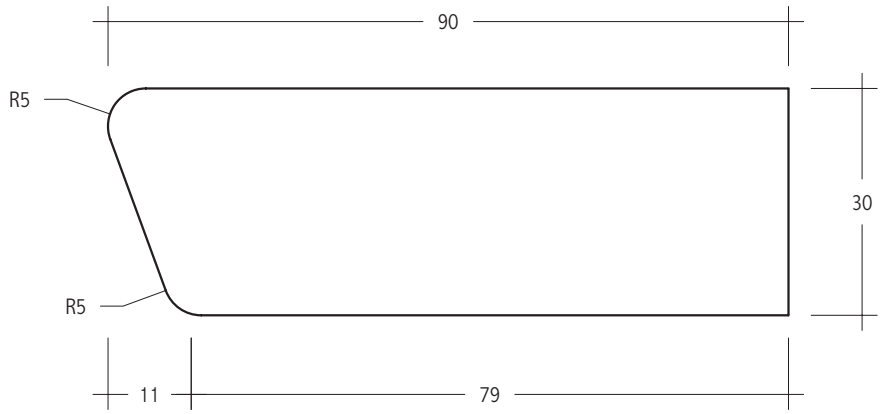

SM5.2 66 x 30

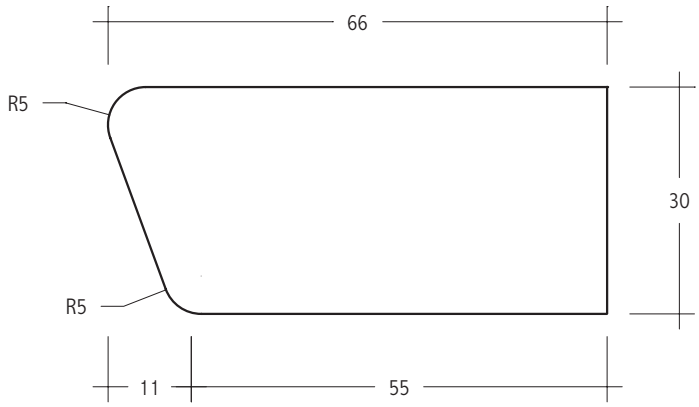

SM5.3 42 x 30

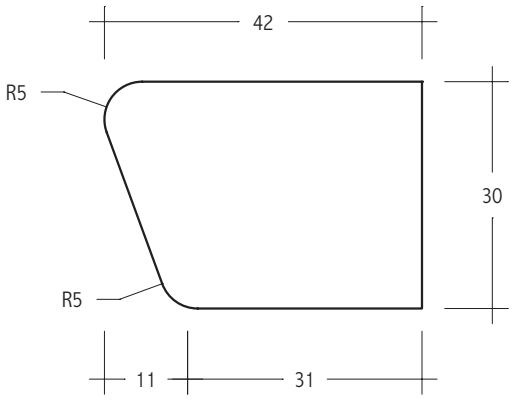

© Copyright FWPA. Published by TABMA

ACTUAL SIZE TO SCALE 01/09

WOOD NATURALLY BETTER

Cover Strip

SM6.1

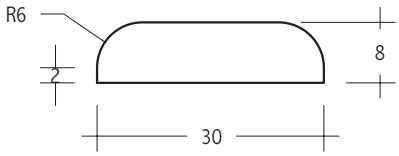

SM6.2

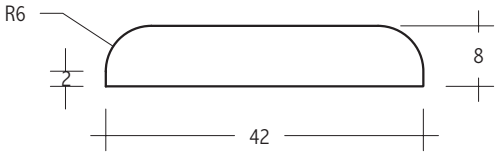

Square Edged Cover Strip

SM7.1

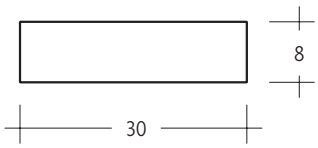

SM7.2

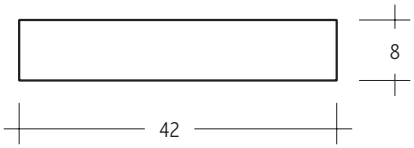

Half Round

SM8.1

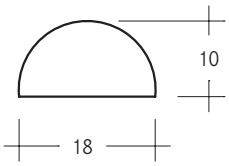

SM8.2

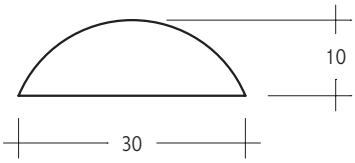

© Copyright FWPA. Published by TABMA ACTUAL SIZE TO SCALE 01/09

Inlay

SM9.1 30 x 10

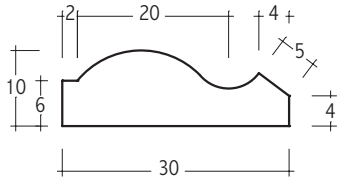

SM9.2 42 x 12

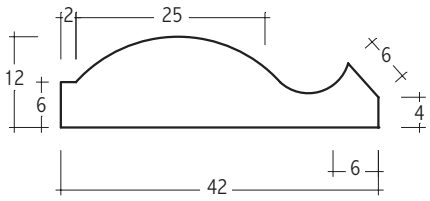

Bolection

SM10.1 30 x 10

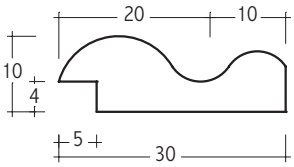

SM10.2 42 x 12

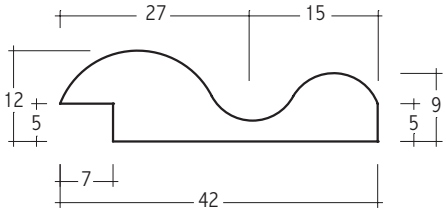

© Copyright FWPA. Published by TABMA

ACTUAL SIZE TO SCALE 01/09

WOOD NATURALLY BETTER

Sash Stop Bead

SM11.1

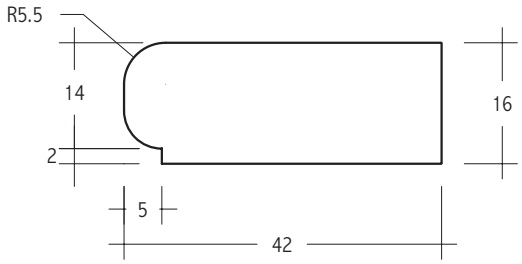

SM11.2

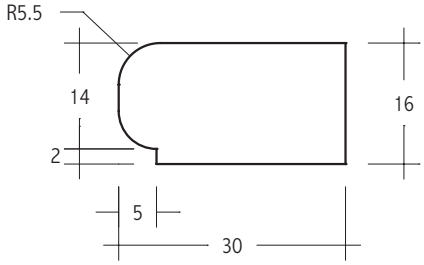

SM11.3

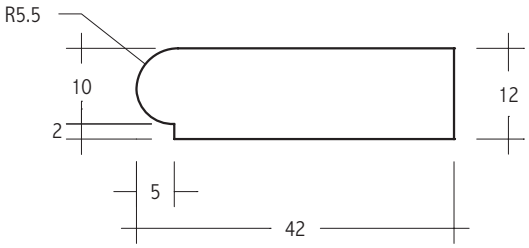

SM11.4

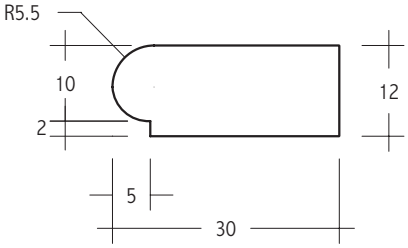

SM11.5

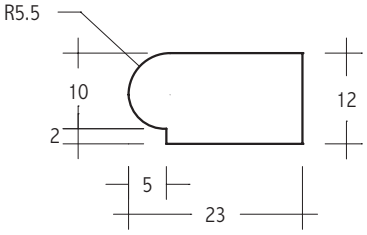

SM11.6

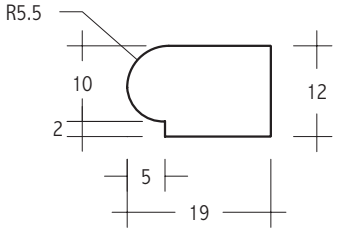

© Copyright FWPA. Published by TABMA

ACTUAL SIZE TO SCALE 01/09

Picture Rail

SM12.1

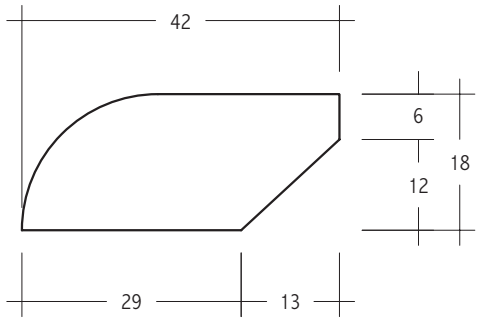

SM12.2

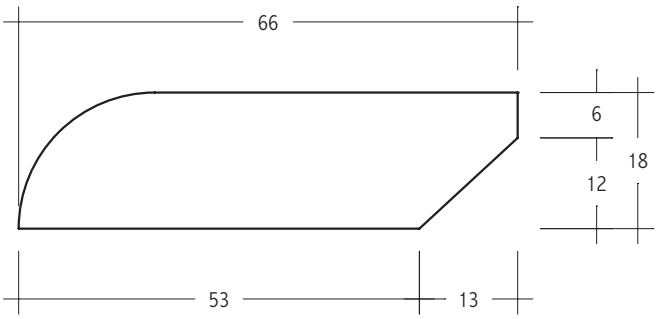

SM12.3

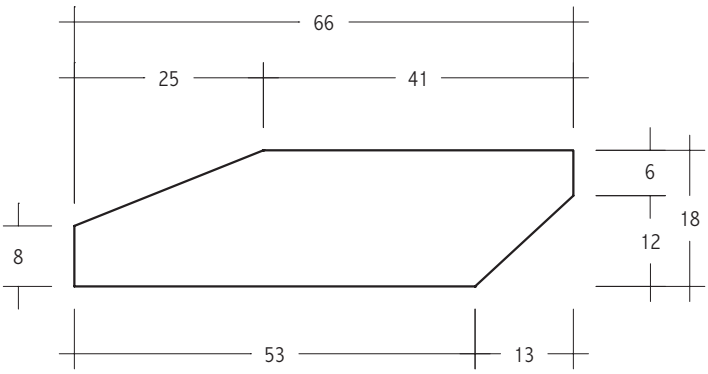

SM12.4

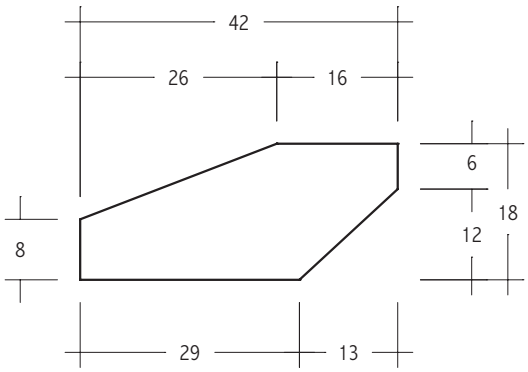

© Copyright FWPA. Published by TABMA

ACTUAL SIZE TO SCALE 01/09

WOOD NATURALLY BETTER

Sundry Mouldings (cont.)

Parting Bead

SM13.1

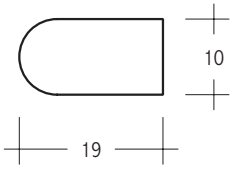

SM13.2

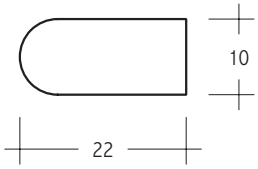

Glazing Bead

SM14.1

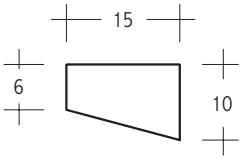

SM14.2

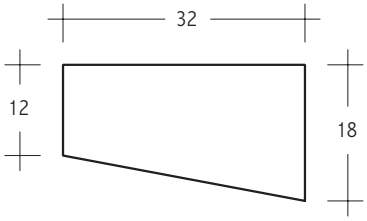

Sash Bead

SM15

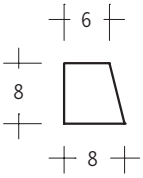

Colonial GLZ Bar

SM16

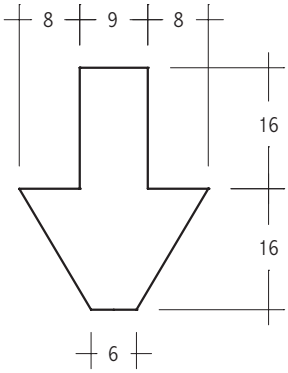

Stormould

SM17

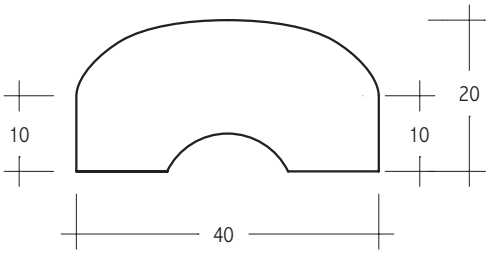

External Corner

SM18.1

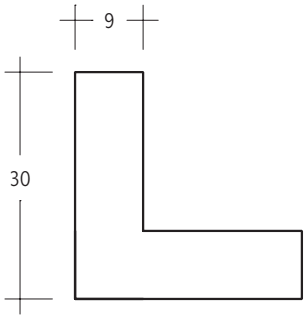

SM18.2

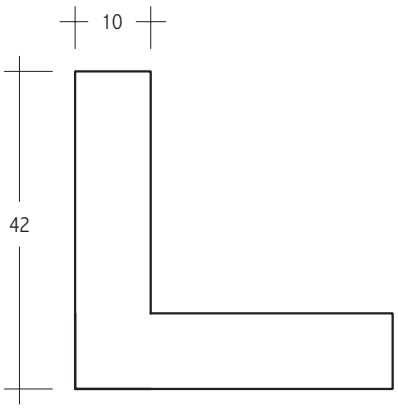

© Copyright FWPA. Published by TABMA

ACTUAL SIZE TO SCALE 01/09

WOOD NATURALLY BETTER

Handrail

T2 88 x 42

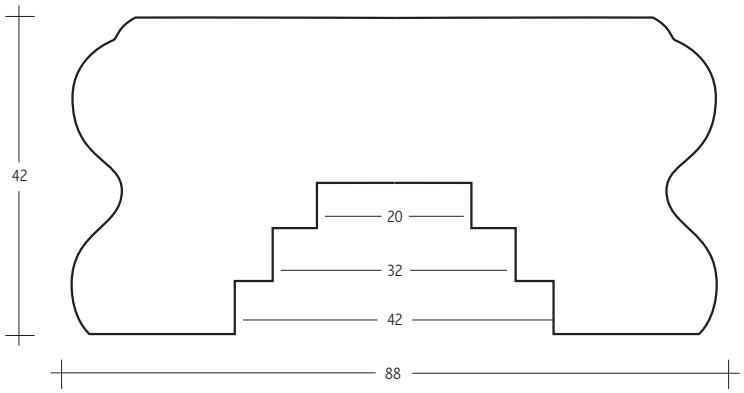

Handrail

T3 66 x 42

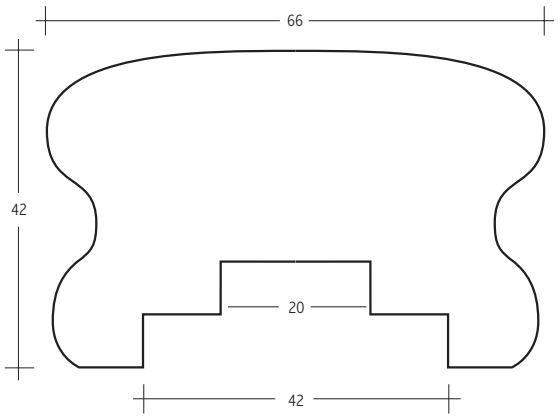

Bottom Rail

T4 80 x 30

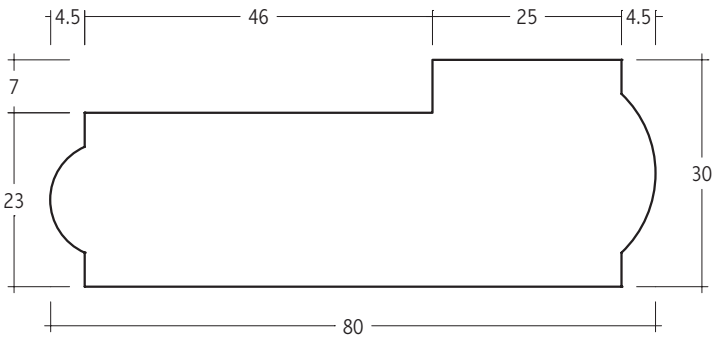

Note: CCA treated Handrail or Bottom Rail should not be used as per the Australian Standard

© Copyright FWPA. Published by TABMA

ACTUAL SIZE TO SCALE 01/09

WOOD NATURALLY BETTER

Bottom Rail
31mm Balustrade

T5.1 88 x 42

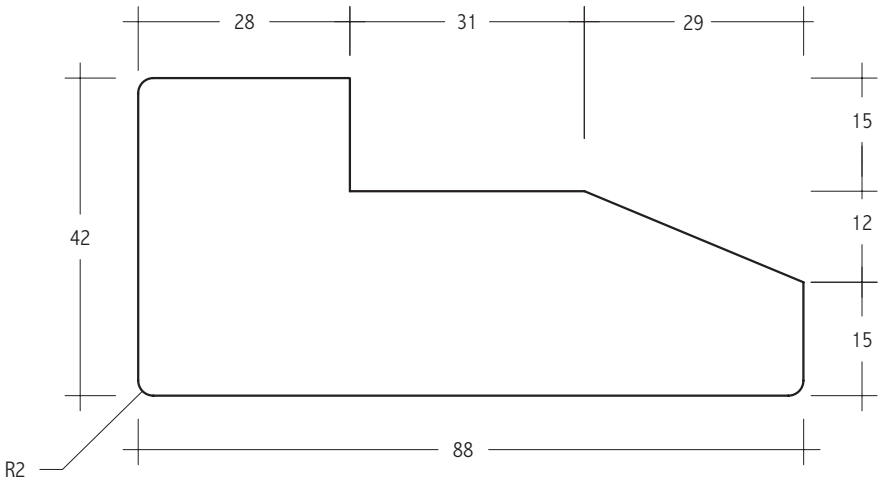

Bottom Rail
42mm Balustrade

T5.2 88 x 42

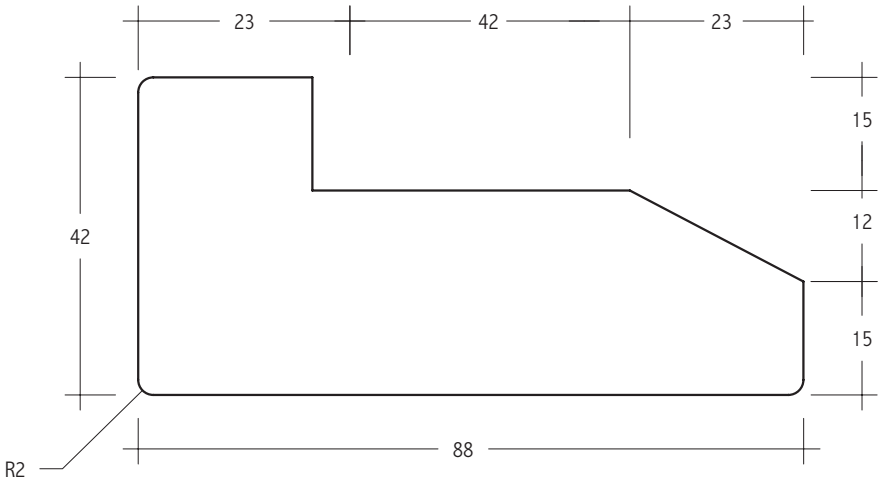

Bottom Rail

T6 66 x 30

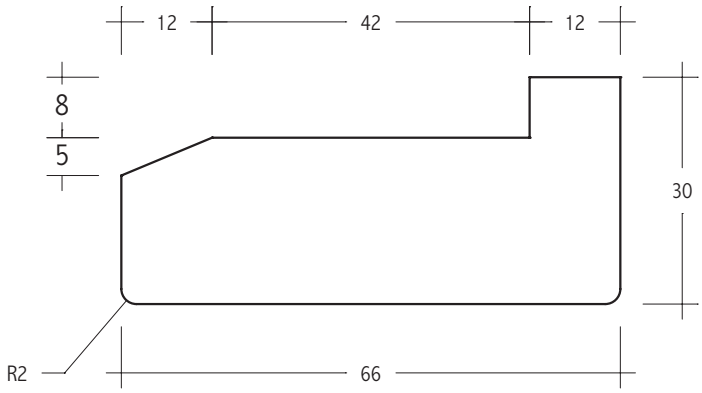

© Copyright FWPA. Published by TABMA ACTUAL SIZE TO SCALE 01/09

25mm Fascia

T7

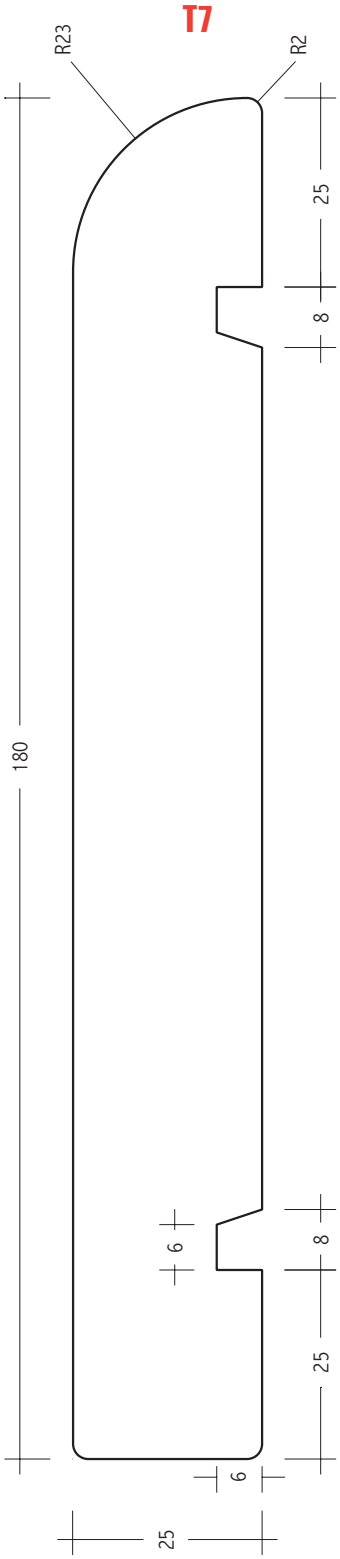

18mm Fascia

T8

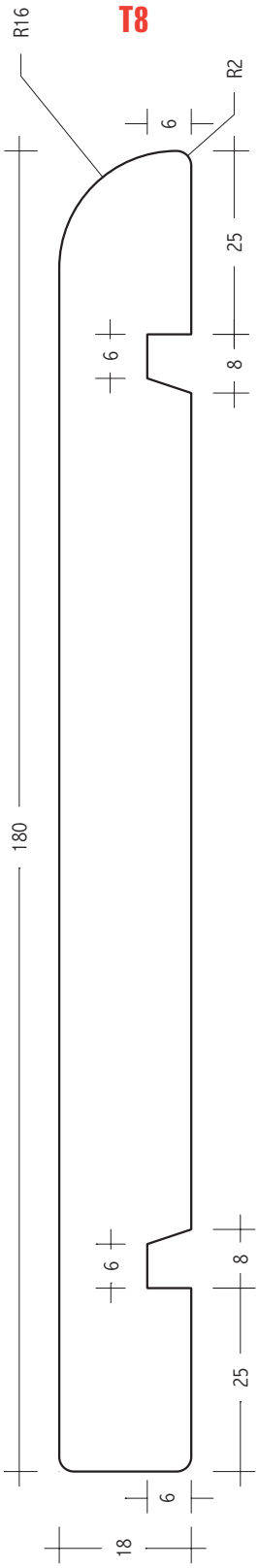

Eaves Lining Board 330

LB1

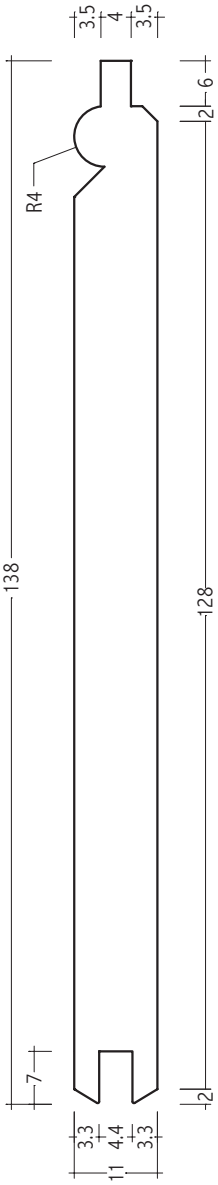

© Copyright FWPA. Published by TABMA ACTUAL SIZE TO SCALE 01/09

WOOD NATURALLY BETTER

Protective Coated Treated H3 Finger Jointed Pine Exterior Use above ground only (cont.)

Posts FJ and laminated

T9.1 185 x 185

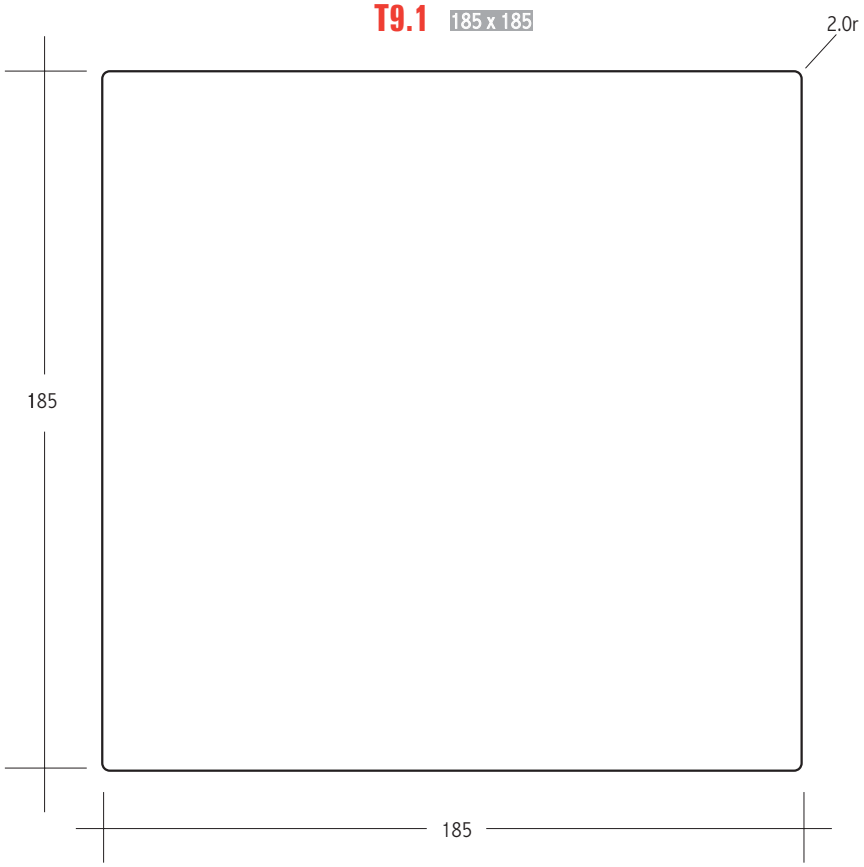

T9.3 88 x 88

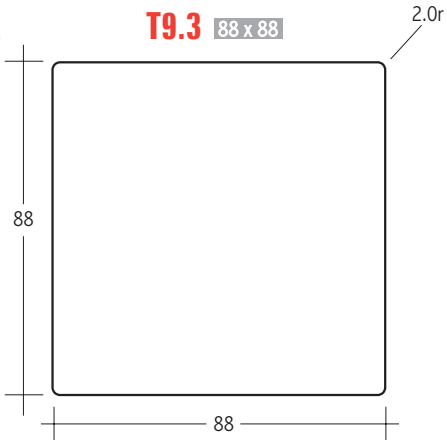

T9.2 135 x 135

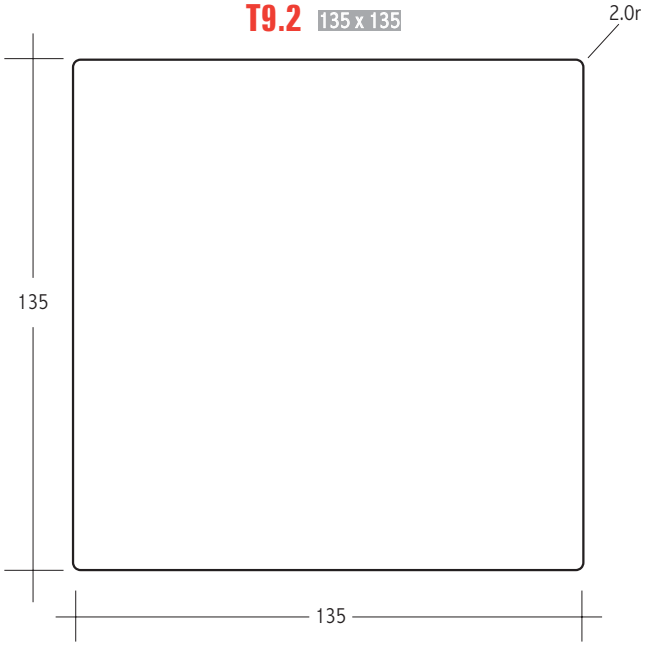

T9.4 112 x 112

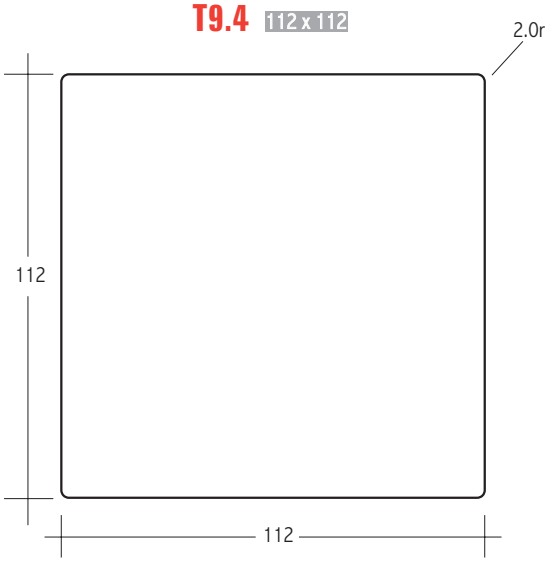

PROFILES SHOWN 50% ACTUAL SIZE

© Copyright FWPA. Published by TABMA

Structural Beams Finger Jointed Laminated GL8

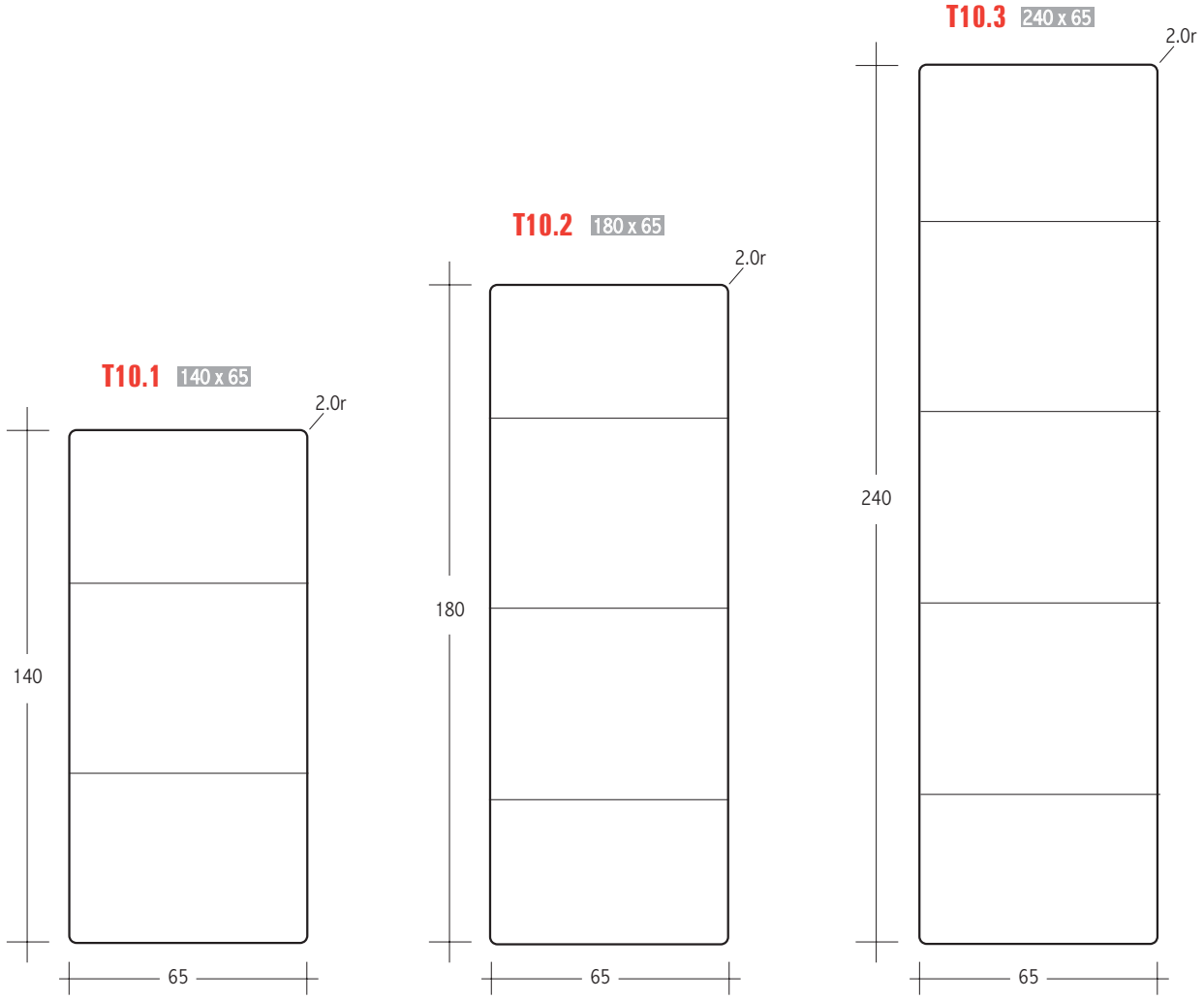

PROFILES SHOWN 50% ACTUAL SIZE

WOOD NATURALLY BETTER

© Copyright FWPA. Published by TABMA

Structural Beams Finger Jointed Laminated GL8

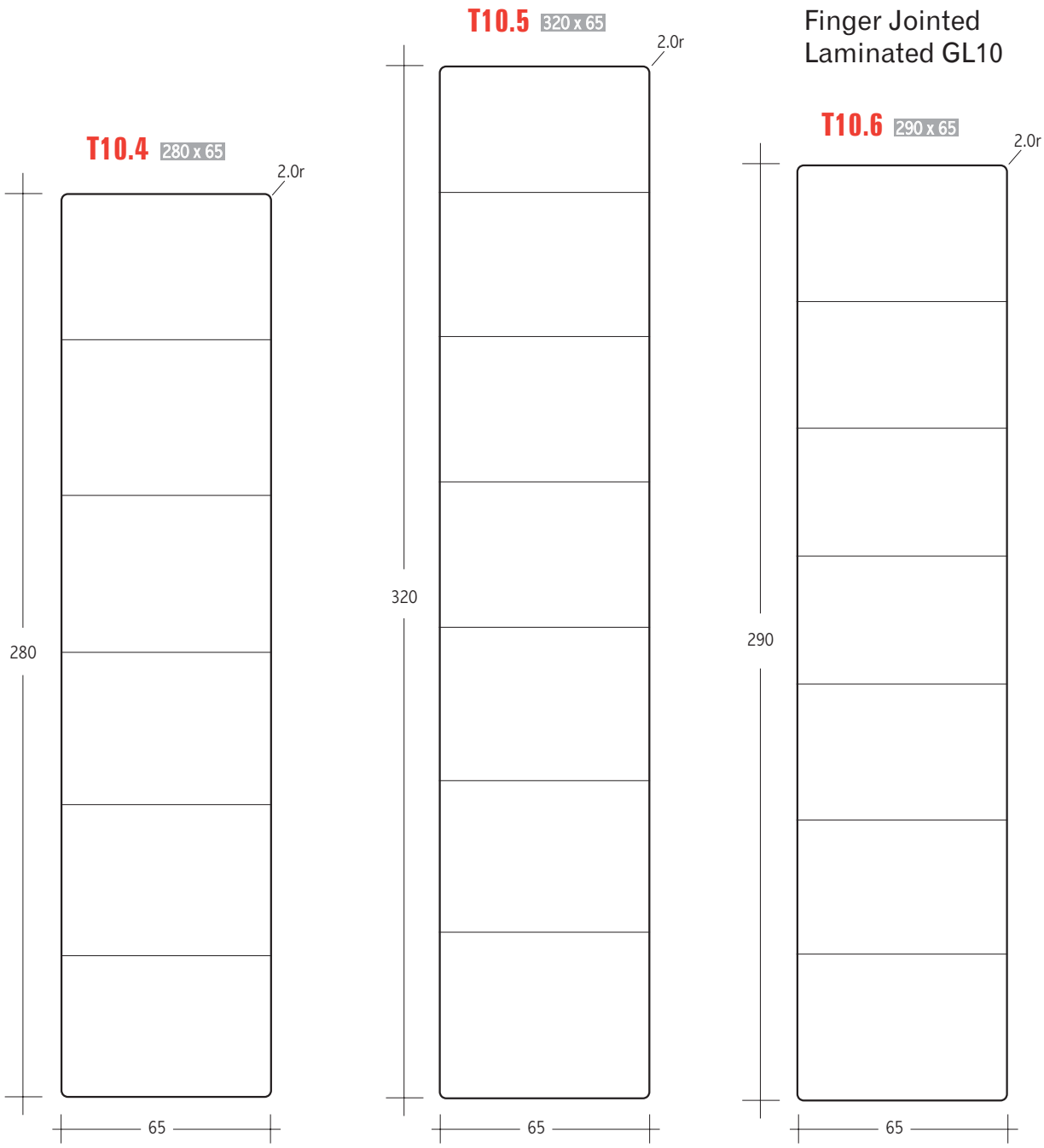

PROFILES SHOWN 50% ACTUAL SIZE

© Copyright FWPA. Published by TABMA

Weather Boards Shiplap

Vee Joint Design Pine **T11.1**

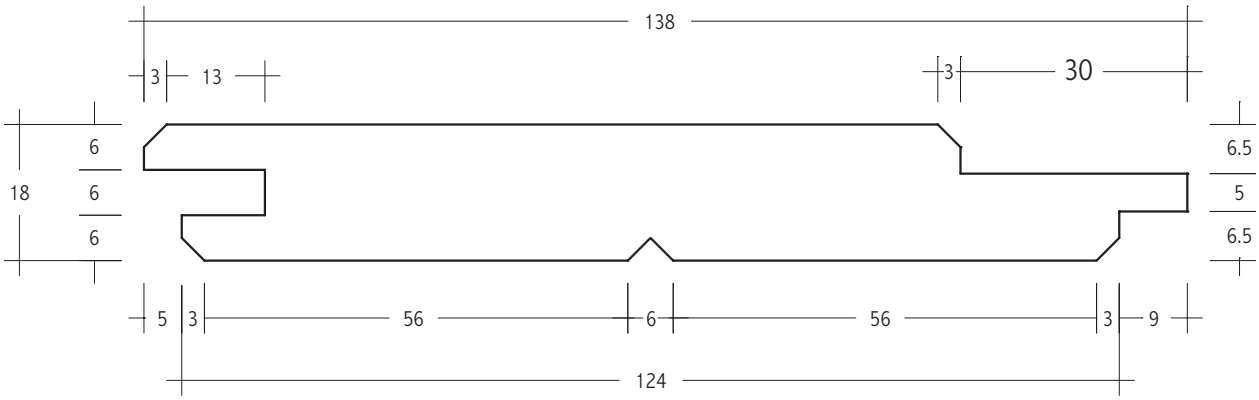

Smooth Edge Shiplap (401) **T11.2**

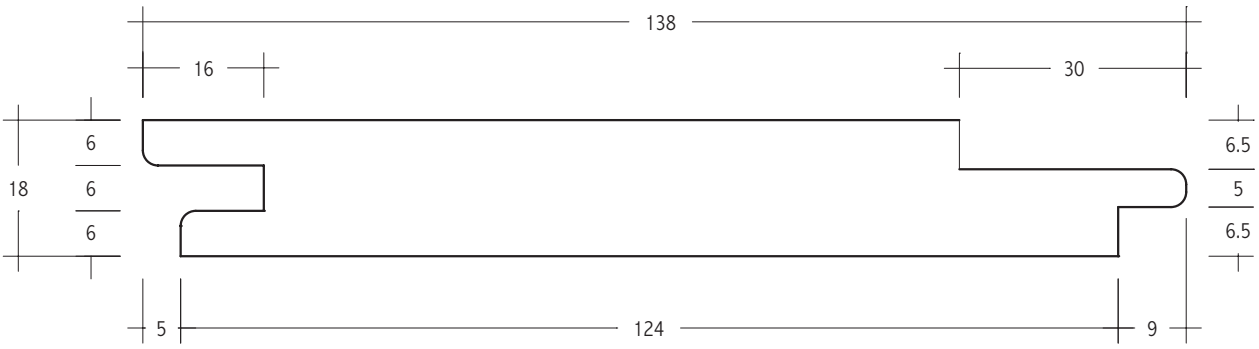

Rebated Door Jamb

T12

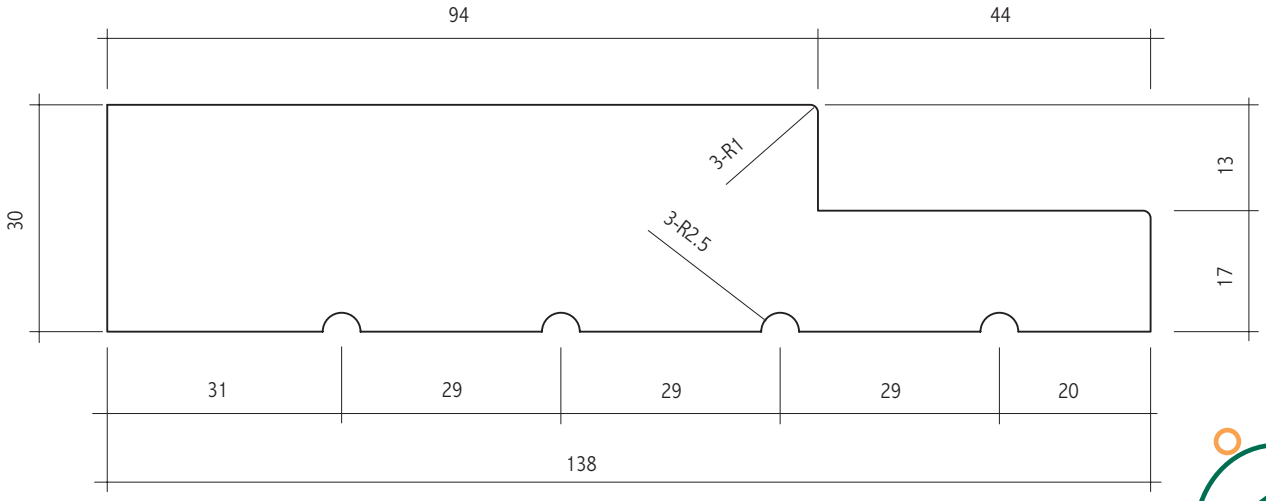

© Copyright FWPA. Published by TABMA

ACTUAL SIZE TO SCALE 01/09

WOOD NATURALLY BETTER

Protective Coated Treated H3 Finger Jointed Pine Exterior Use above ground only (cont.)

Weather Boards

T11.4 138 x 18

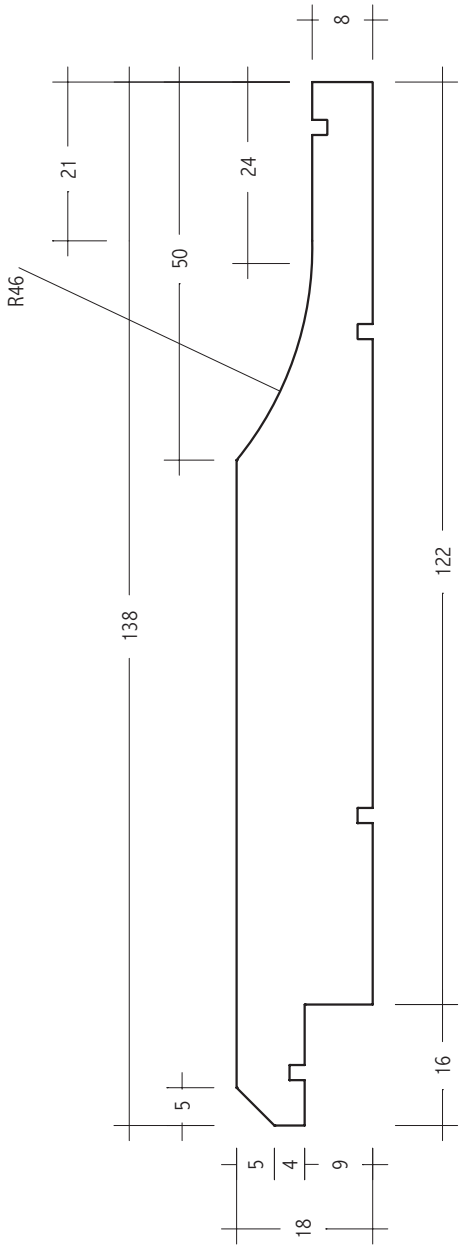

T11.5 185 x 18

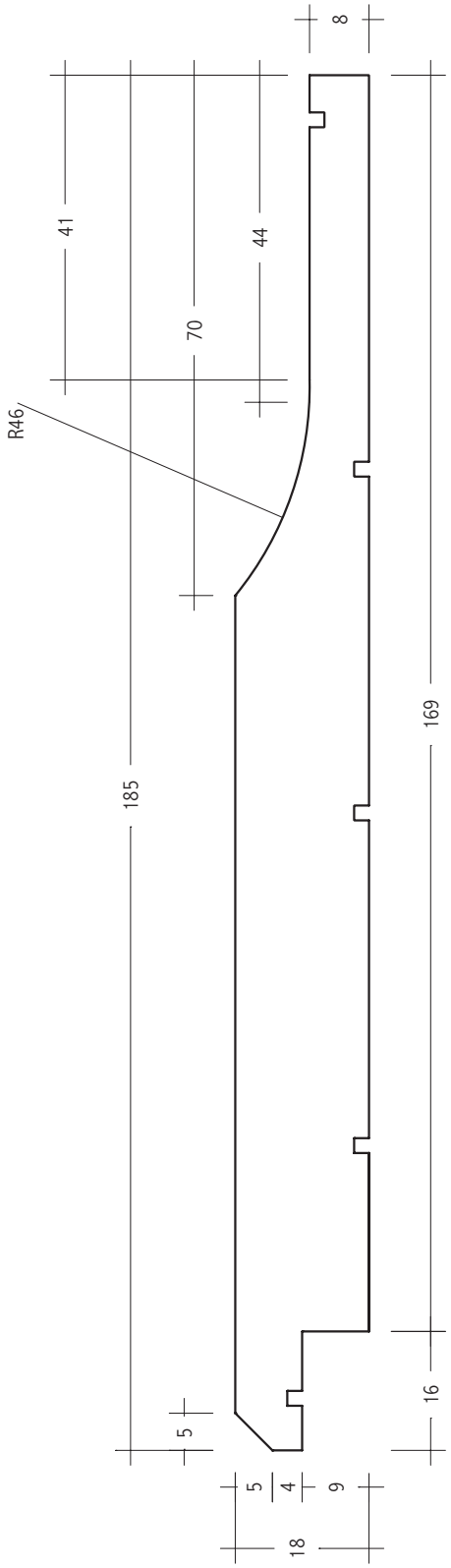

© Copyright FWPA. Published by TABMA ACTUAL SIZE TO SCALE 01/09

WOOD NATURALLY BETTER

18mm Tri Quad/Fillet Mould

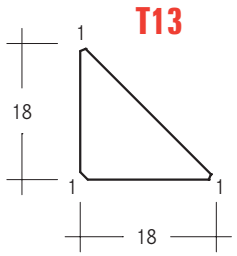

18mm Quad

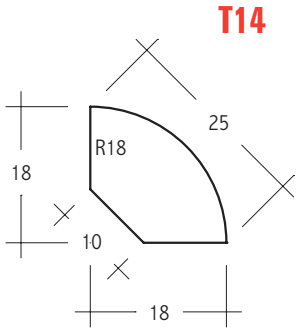

23mm Quad

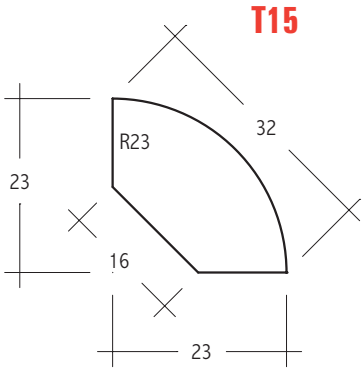

18mm Scotia

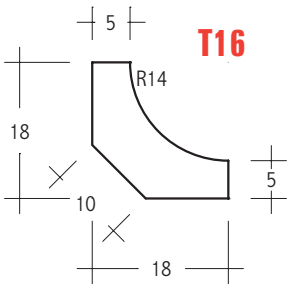

30mm Scotia

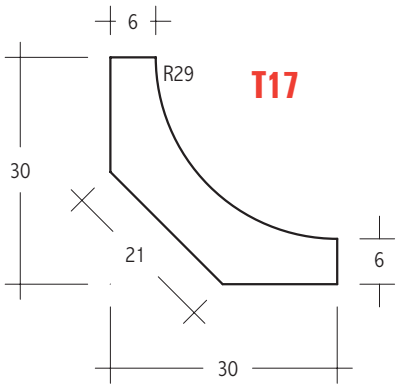

© Copyright FWPA. Published by TABMA

ACTUAL SIZE TO SCALE 01/09

WOOD NATURALLY BETTER

Lattice surround To fit sawn lattice

T25.1 90 x 35

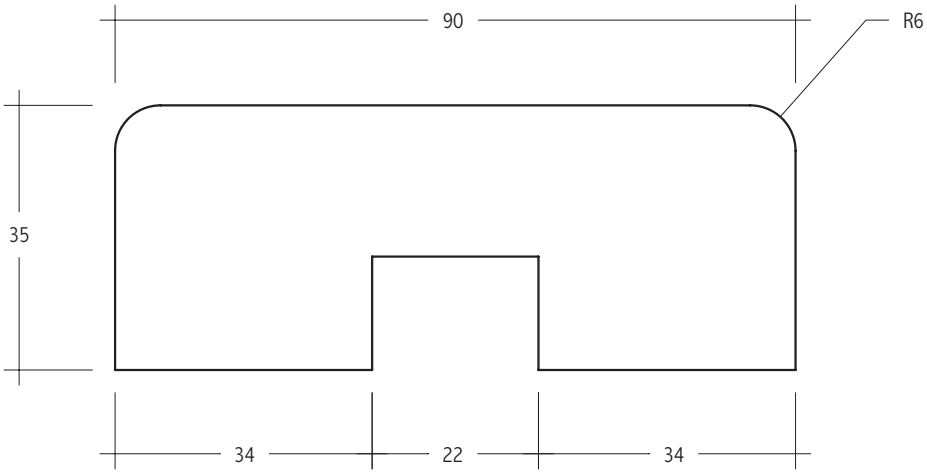

T25.2 70 x 35

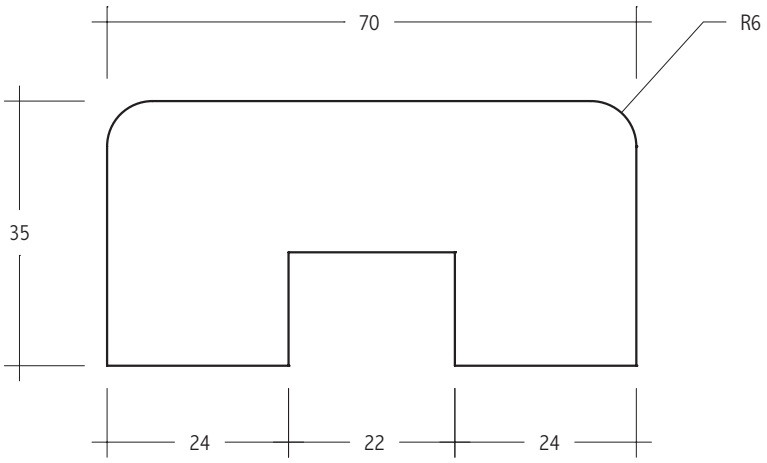

© Copyright FWPA. Published by TABMA ACTUAL SIZE TO SCALE 01/09

Lattice surround To fit dressed lattice

T25.3 90 x 35

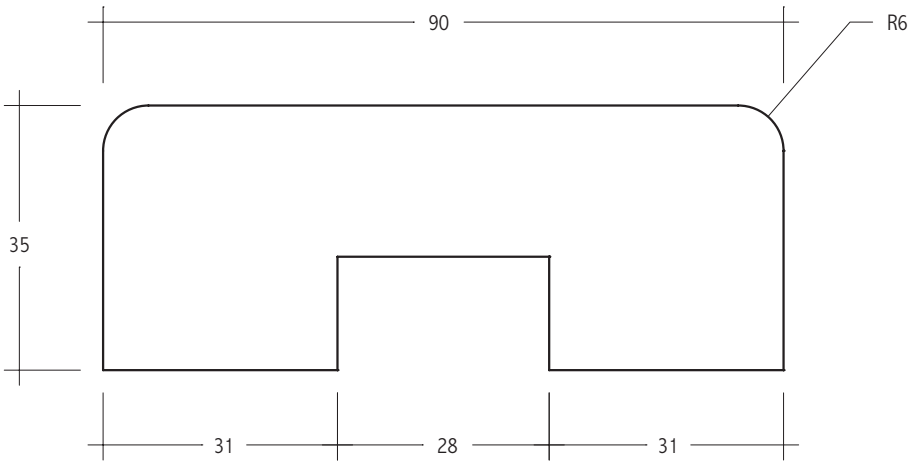

T25.4 70 x 35

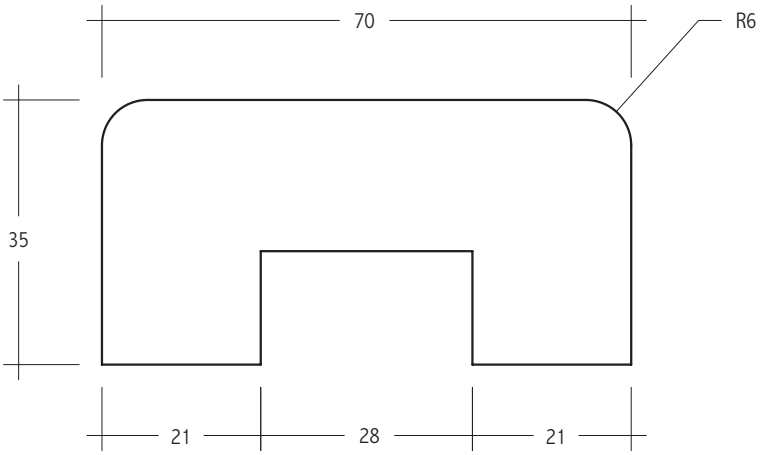

© Copyright FWPA. Published by TABMA

ACTUAL SIZE TO SCALE 01/09

WOOD NATURALLY BETTER

Fence capping

T30.1 115 x 35

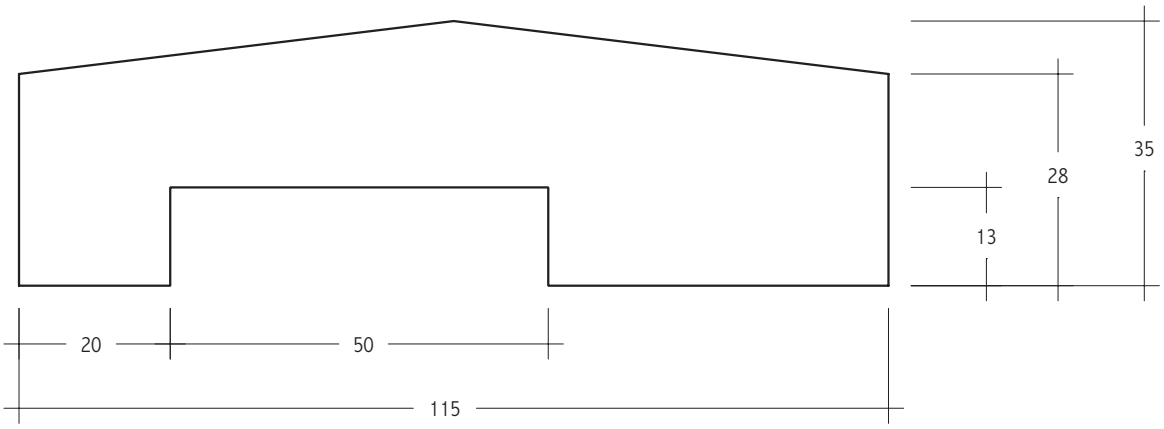

T30.2 135 x 39

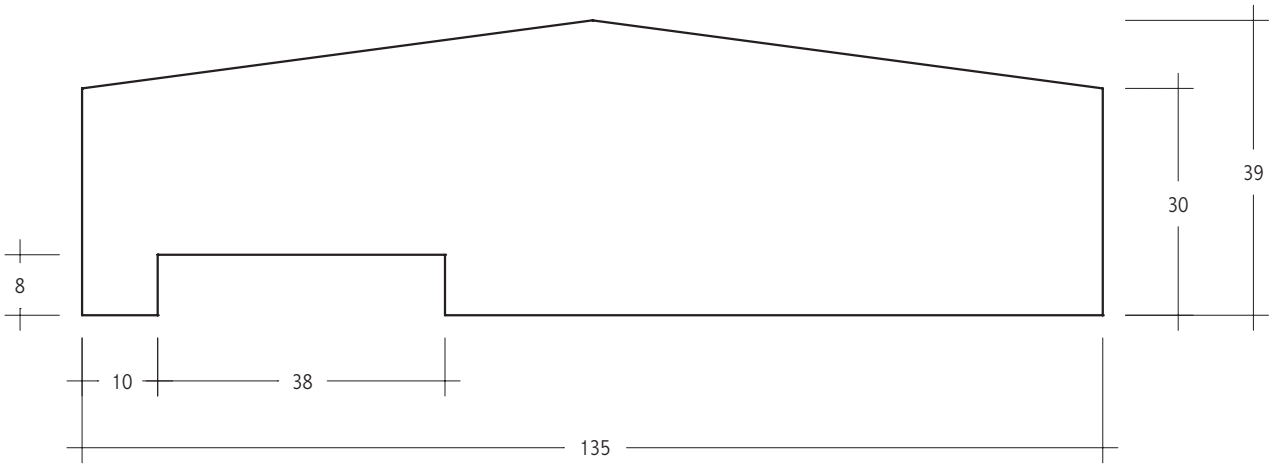

Important Recommendations when using Treated Timber

1. Use corrosion resistant fasteners, i.e. hot dipped galvanised or stainless steel bolts, plates, nails, etc.
2. End seal after cutting and seal all housed or checked joints prior to installing.
3. As a general rule use oil-based undercoats over primed treated timber.

© Copyright FWPA. Published by TABMA

White Cypress Unseasoned

Round log cabin

EC1 ex 100 x 25

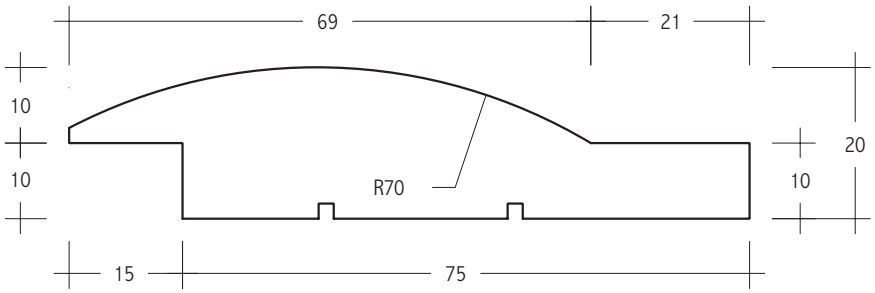

Round double log cabin

EC2 ex 150 x 25

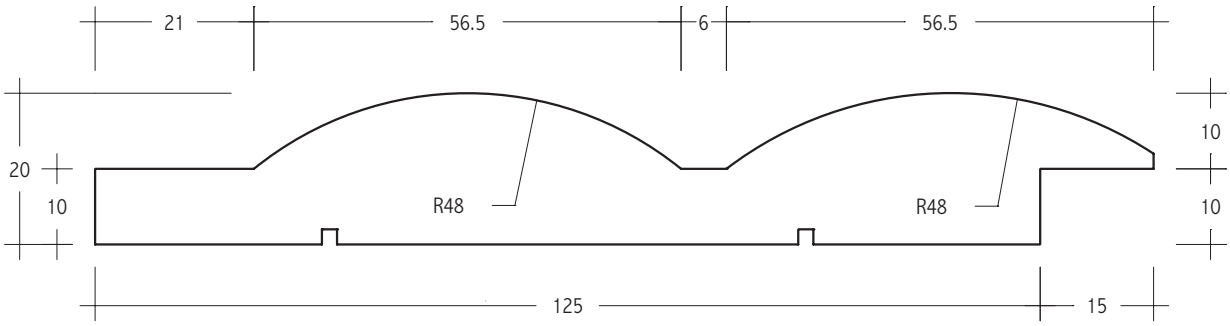

Flat log cabin

EC3 ex 100 x 25

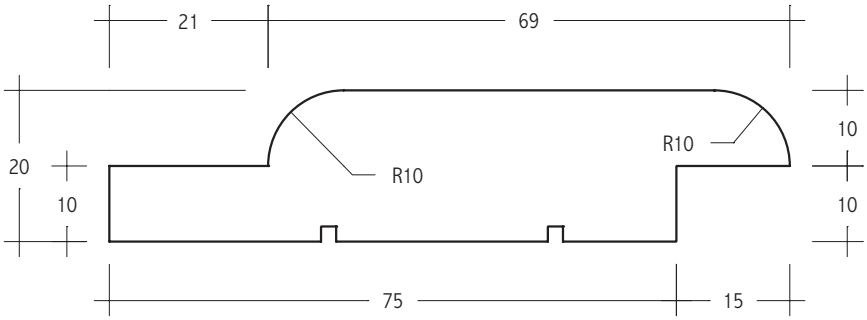

Flat double log cabin

EC4 ex 150 x 25

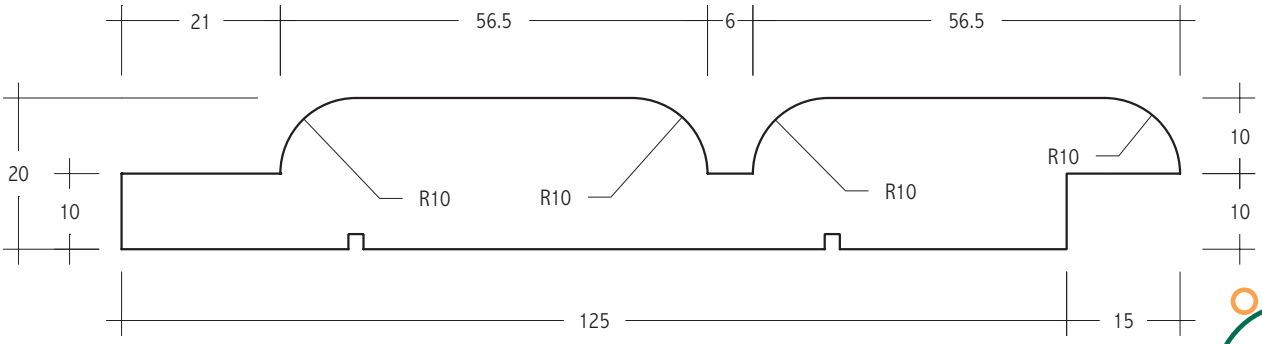

© Copyright FWPA. Published by TABMA

ACTUAL SIZE TO SCALE 01/09

WOOD NATURALLY BETTER

White Cypress Unseasoned

Rusticated

EC5.1 ex 100 x 25

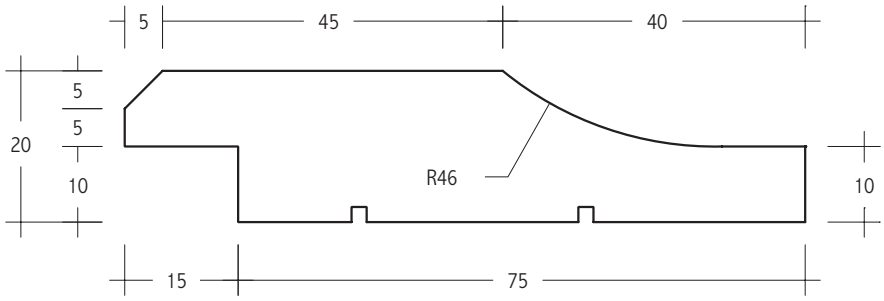

EC5.2 ex 150 x 25

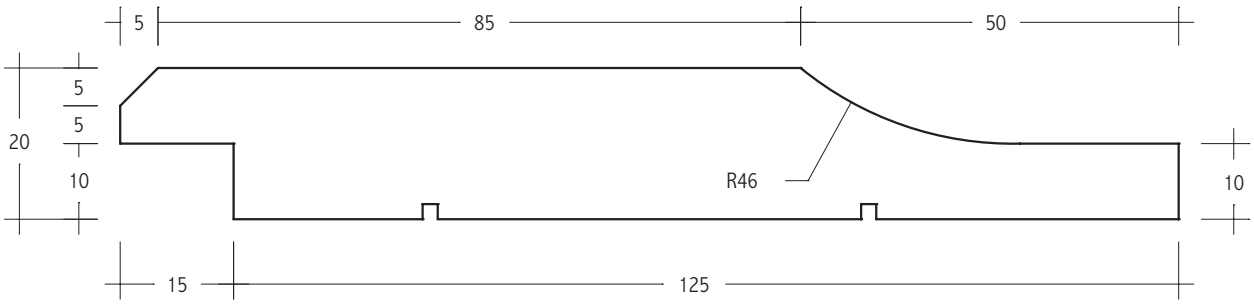

© Copyright FWPA. Published by TABMA ACTUAL SIZE TO SCALE 01/09

White Cypress Unseasoned

EC5.3 ex 175 x 25

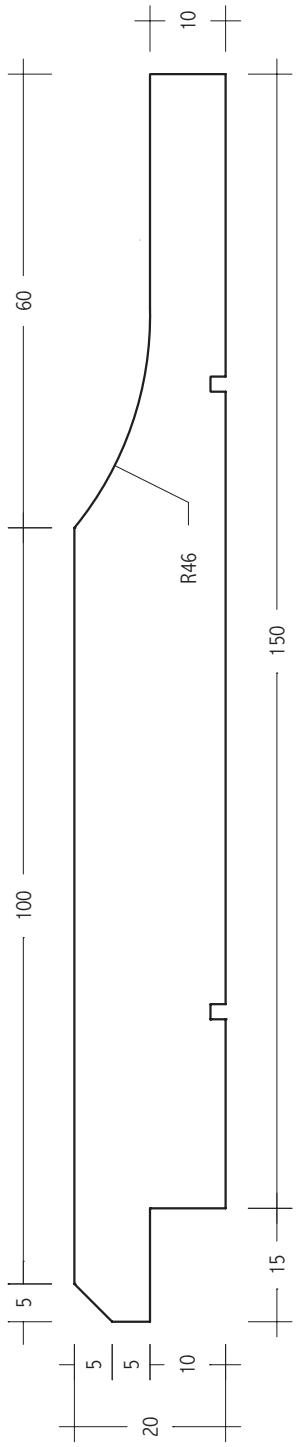

EC5.4 ex 200 x 25

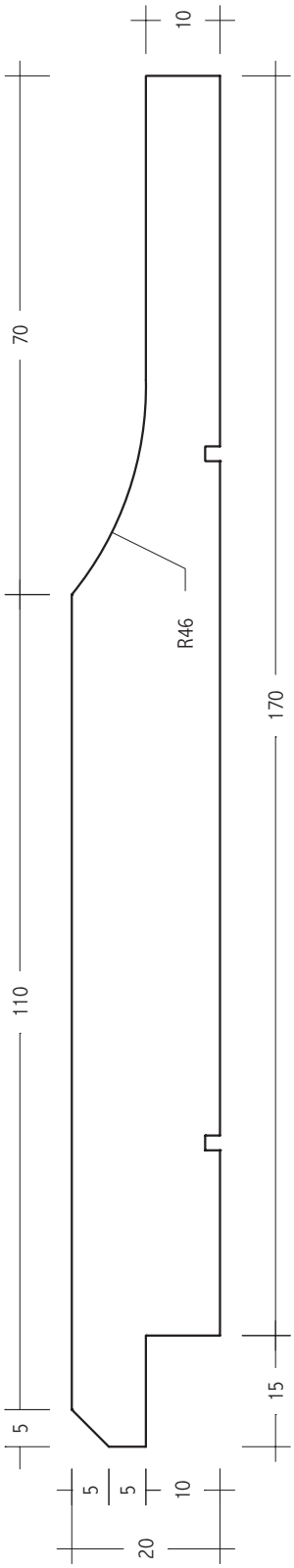

© Copyright FWPA. Published by TABMA ACTUAL SIZE TO SCALE 01/09

WOOD NATURALLY BETTER

White Cypress Unseasoned

Checked and nosed (tear drop)

EC6 ex 100 x 25

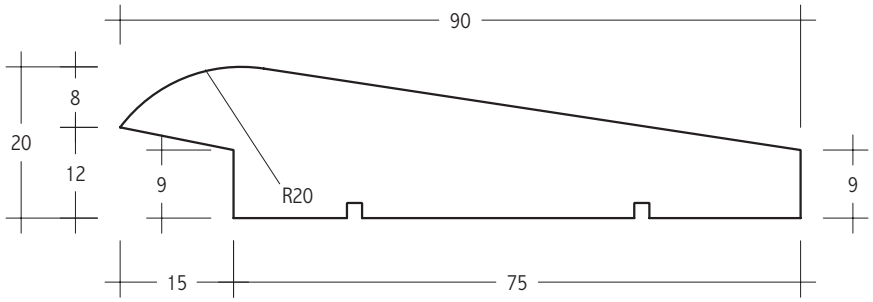

Double checked and nosed (double tear drop)

EC7 ex 150 x 25

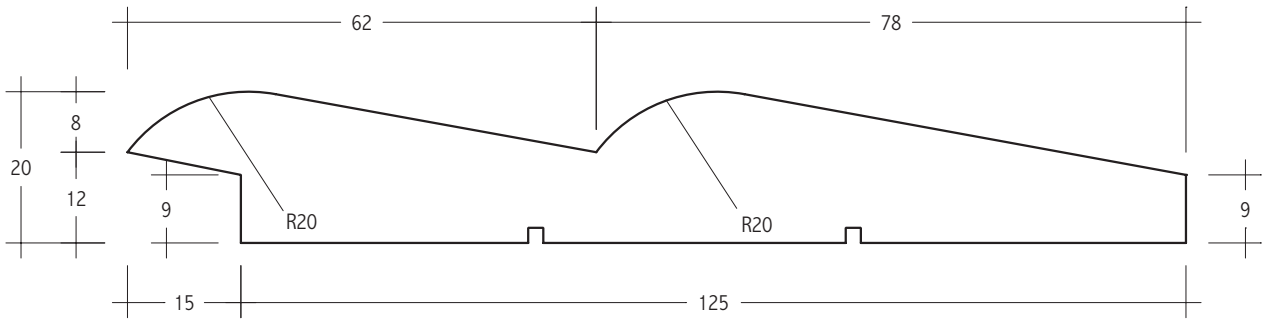

© Copyright FWPA. Published by TABMA ACTUAL SIZE TO SCALE 01/09

Western Red Cedar

Unseasoned select – Bevel sawn siding

EC8.1 ex 200 x 25

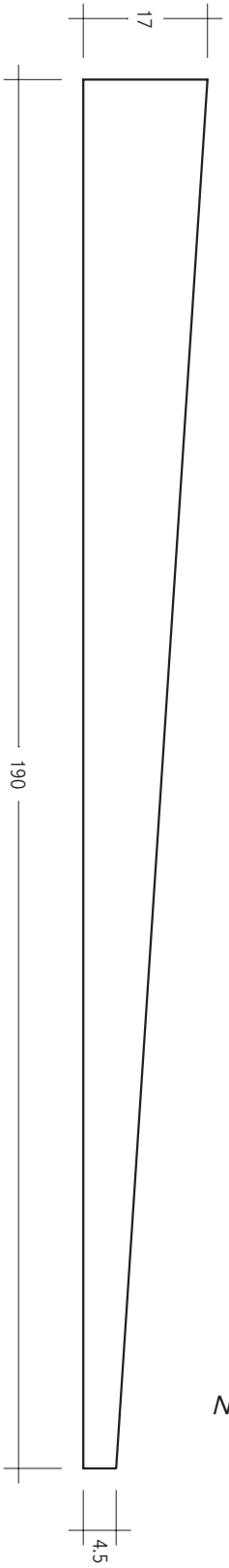

Seasoned clear grade

EC8.2 ex 200 x 25

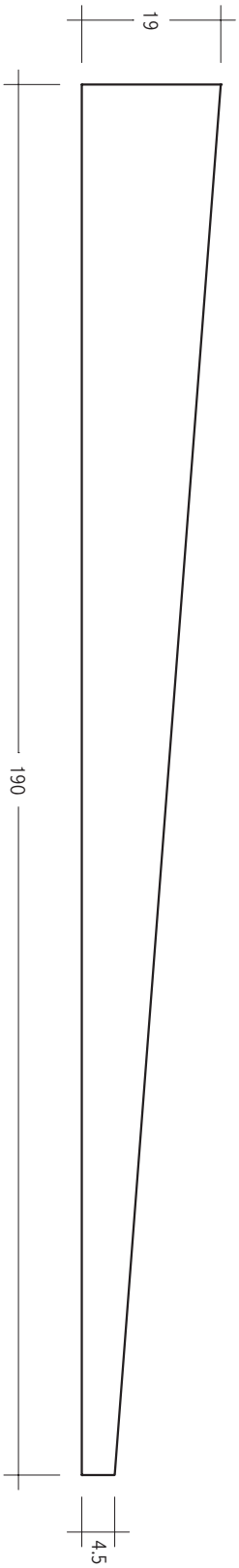

Note: Recommended cover 160

© Copyright FWPA. Published by TABMA

ACTUAL SIZE TO SCALE 01/09

WOOD NATURALLY BETTER

Western Red Cedar

Tongued and Grooved
V Joint

EC9.1 ex 100 x 25

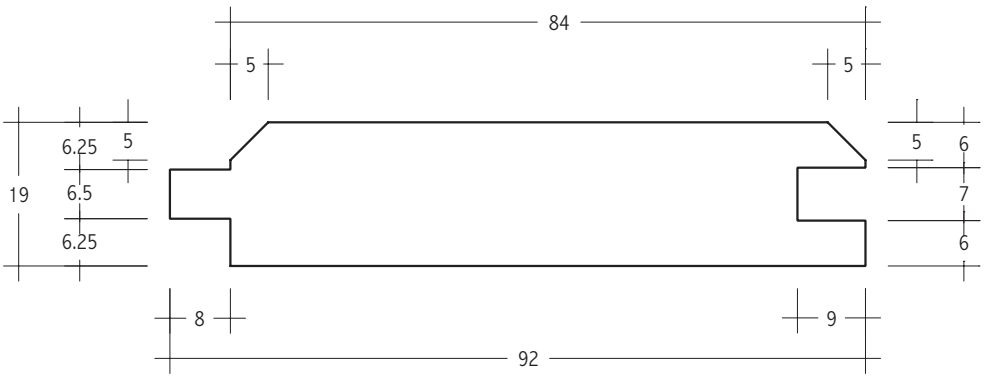

EC9.2 ex 150 x 25

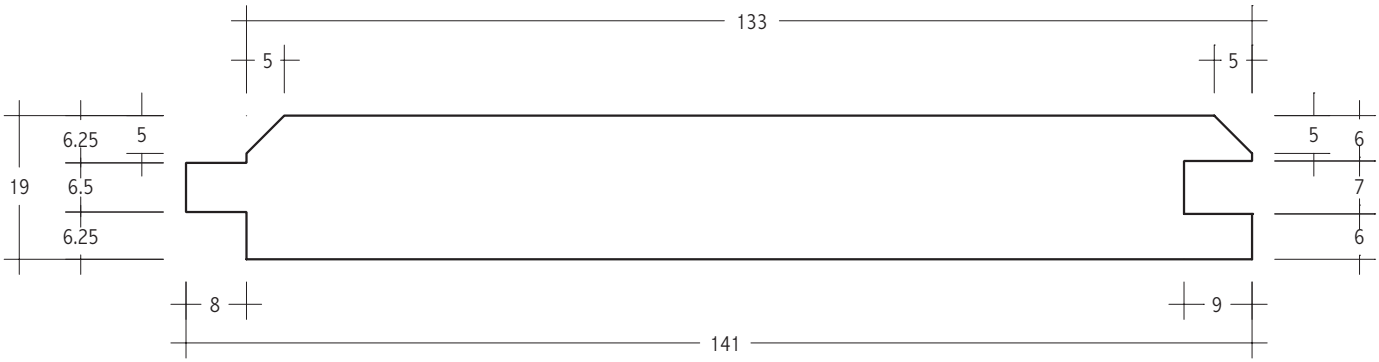

© Copyright FWPA. Published by TABMA

ACTUAL SIZE TO SCALE 01/09

Shiplap

EC10.1 ex 100 x 25

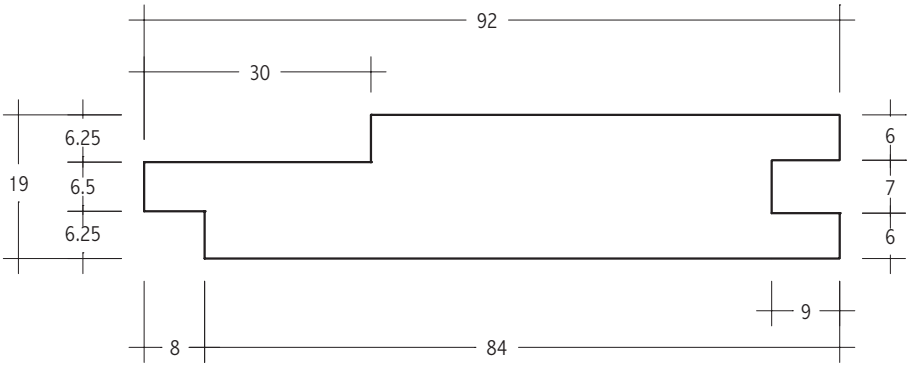

EC10.2 ex 150 x 25

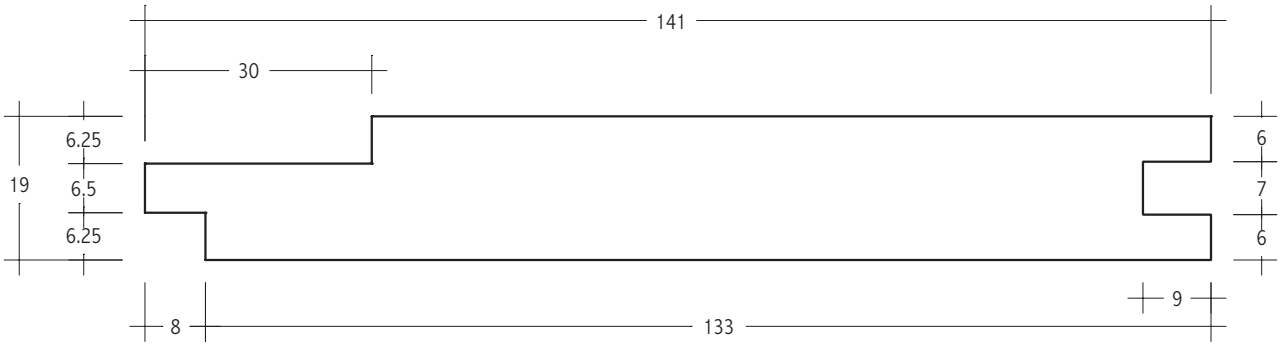

© Copyright FWPA. Published by TABMA

ACTUAL SIZE TO SCALE 01/09

WOOD NATURALLY BETTER

Baltic Pine

Checked and Chamfered

EC11 ex 175 x 25

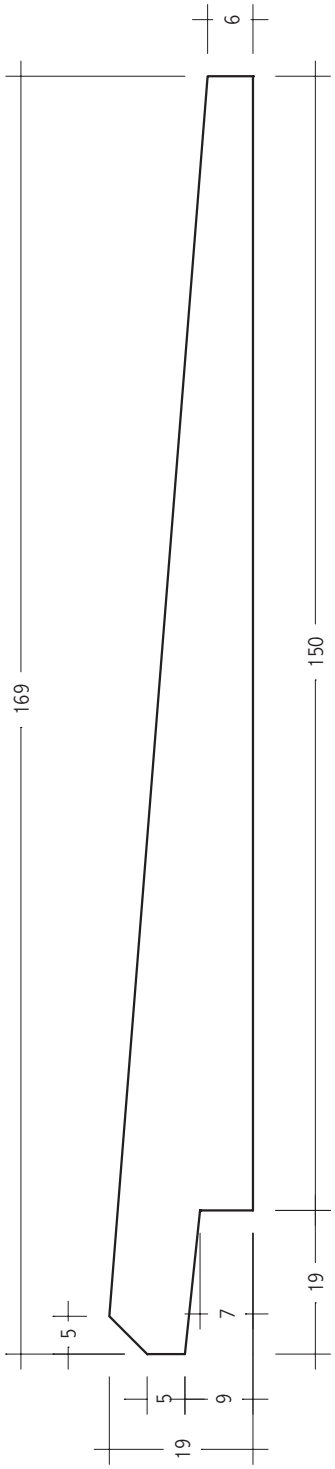

Radiata Pine

Treated CCA Kiln Dried Siding
Sawnface

EC15 170 x 19

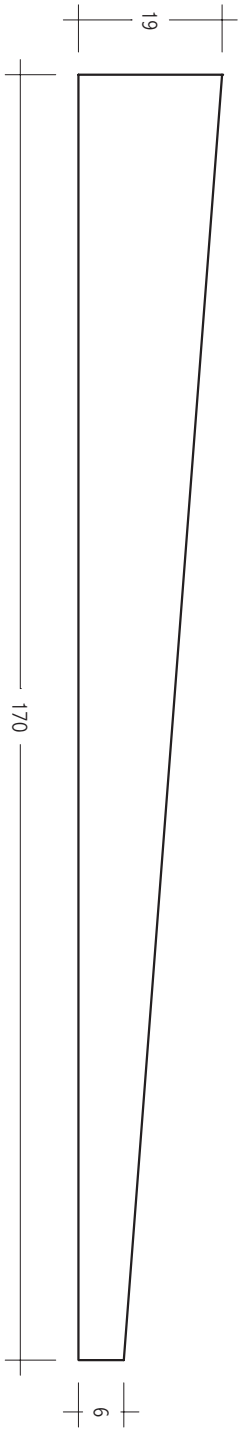

© Copyright FWPA. Published by TABMA

ACTUAL SIZE TO SCALE 01/09

Radiata Pine

Treated Seasoned
Shiplap Dressed face

EC12 140 x 19

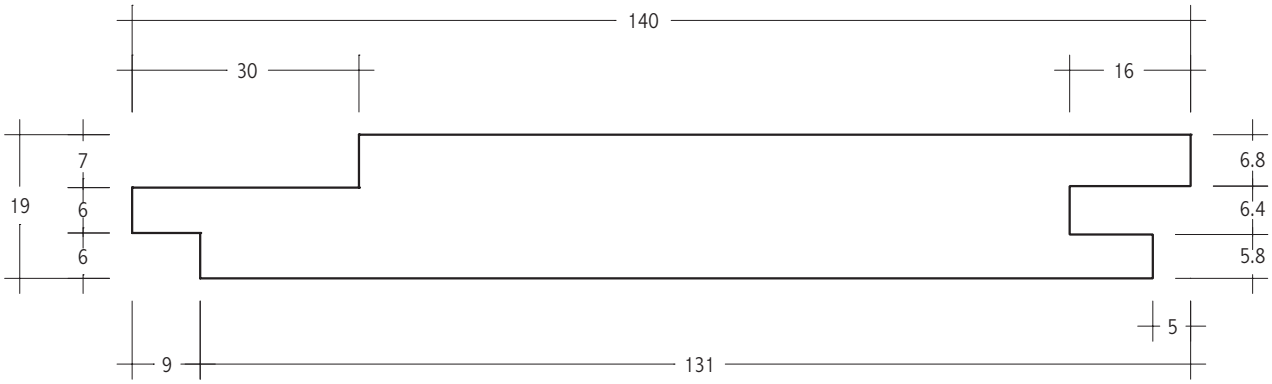

Shiplap Sawn Face

EC13 140 x 19

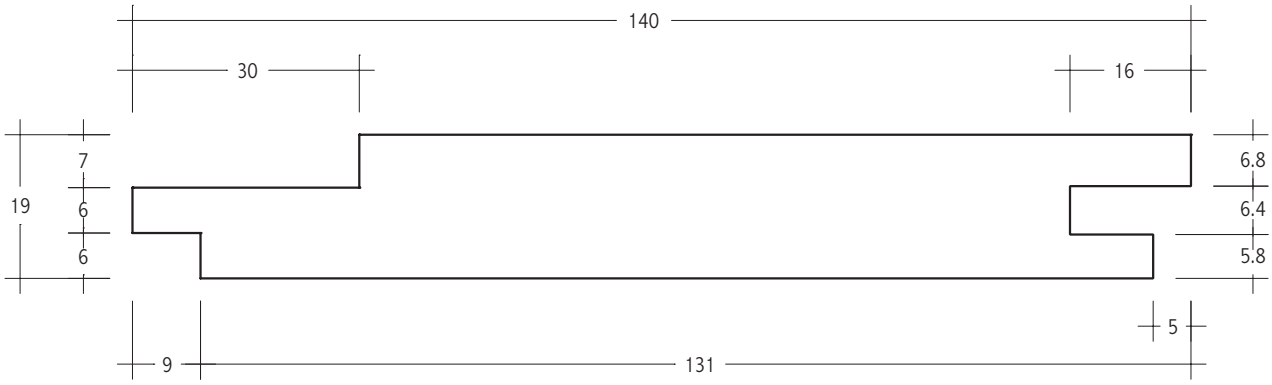

Rusticated Dressed Face

EC14 140 x 19

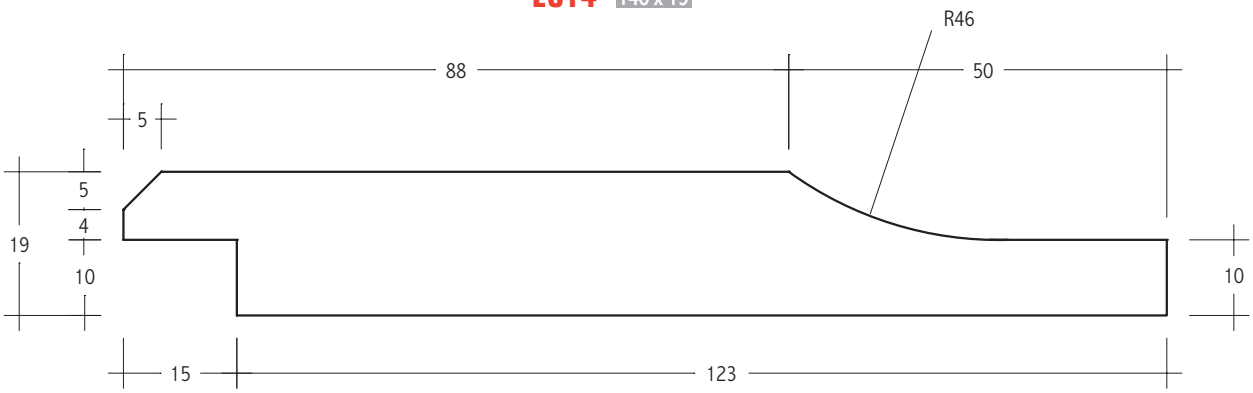

© Copyright FWPA. Published by TABMA

ACTUAL SIZE TO SCALE 01/09

WOOD NATURALLY BETTER

Hardwood Structural Flooring

Secret nail

FD1.1 ex 75 x 25

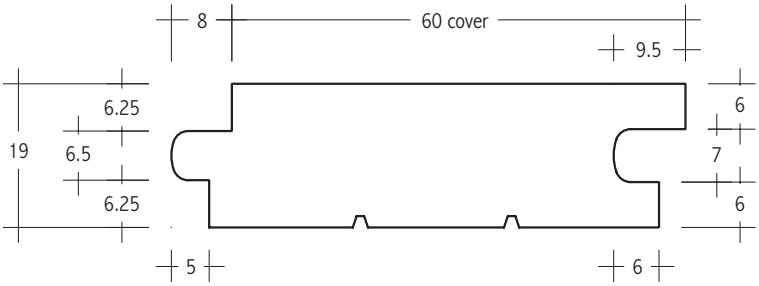

FD1.2 ex 100 x 25

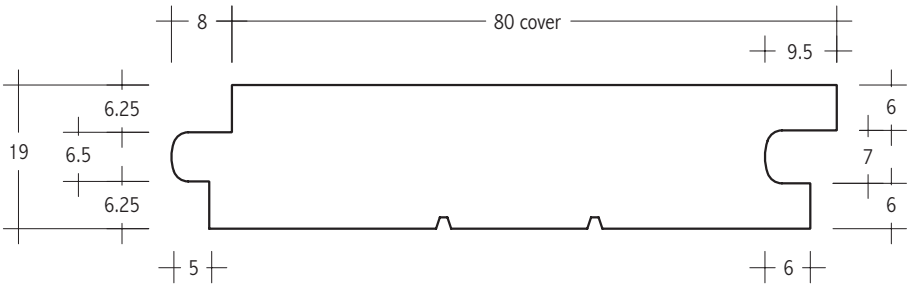

Top nail

FD2 ex 150 x 25

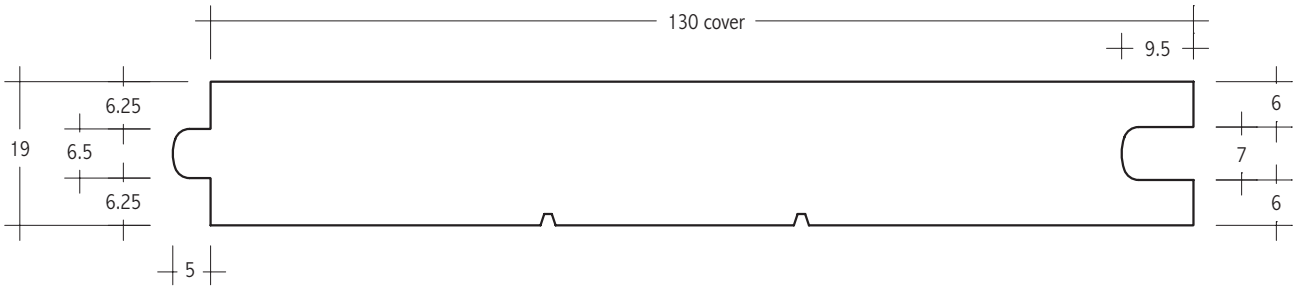

© Copyright FWPA. Published by TABMA

ACTUAL SIZE TO SCALE 01/09

Hardwood Structural Flooring

Secret nail

FD3.1 ex 75 x 31

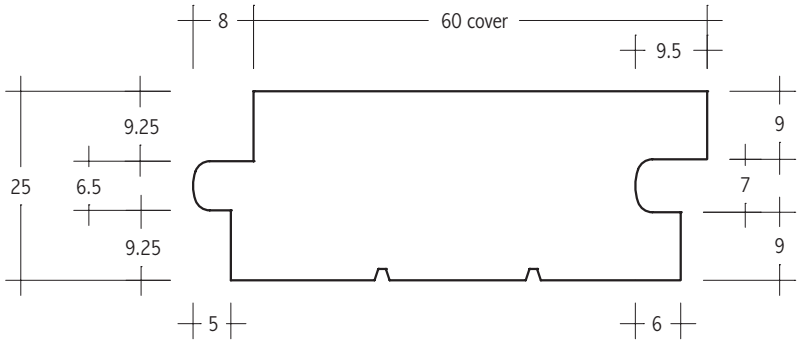

FD3.2 ex 100 x 31

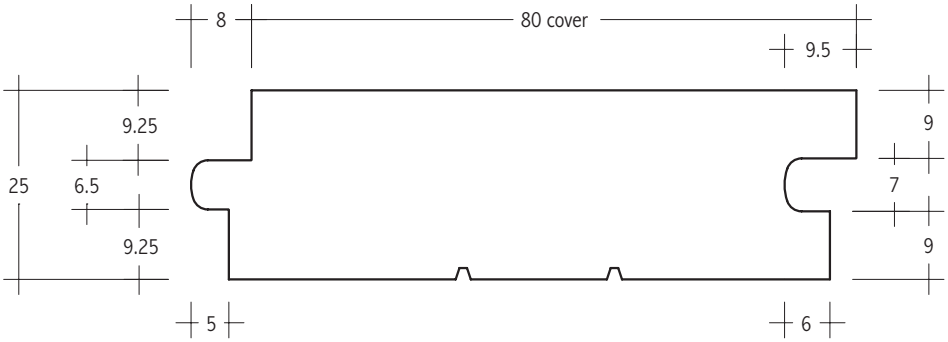

© Copyright FWPA. Published by TABMA

ACTUAL SIZE TO SCALE 01/09

WOOD NATURALLY BETTER

White Cypress

FD5.1

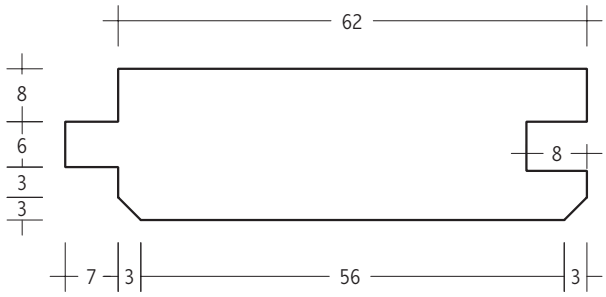

FD5.2

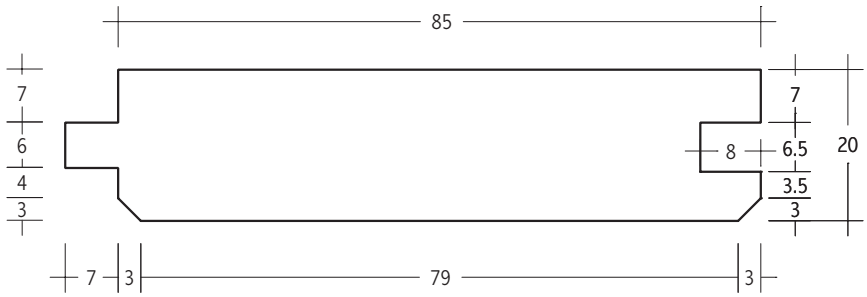

FD5.3

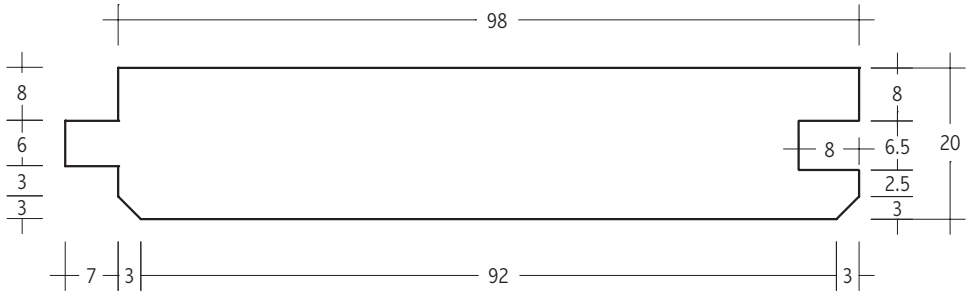

FD5.4

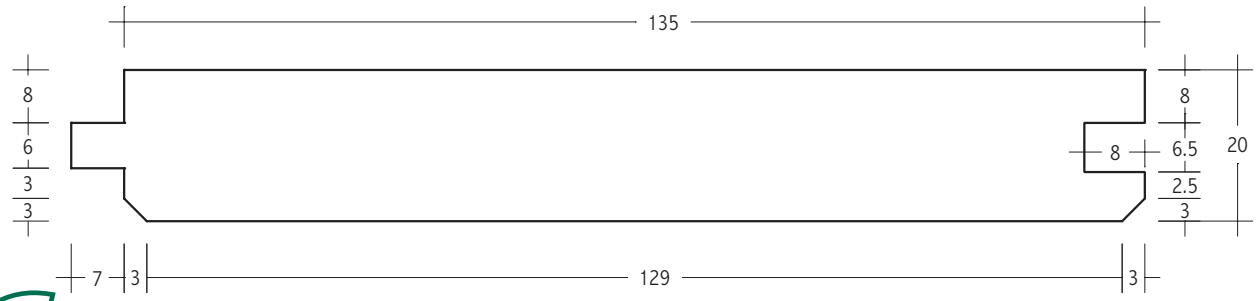

Also available: 75mm cover; 100mm cover; 152mm cover

© Copyright FWPA. Published by TABMA ACTUAL SIZE TO SCALE 01/09

Radiata Pine

FD6.1

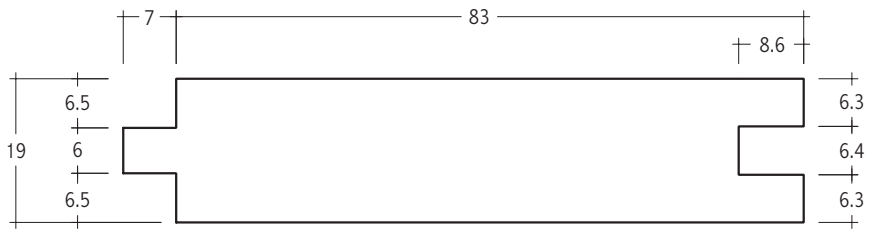

FD6.2

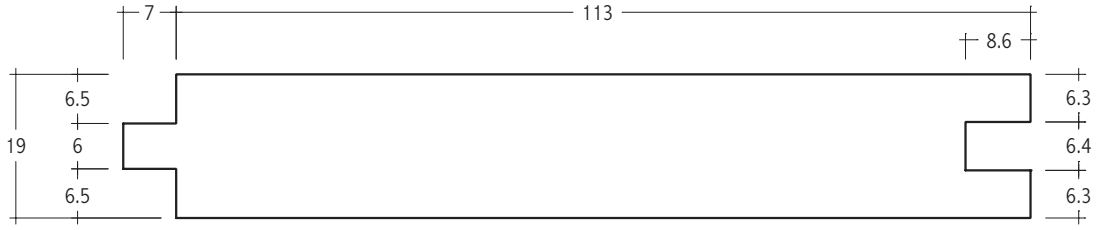

FD6.3

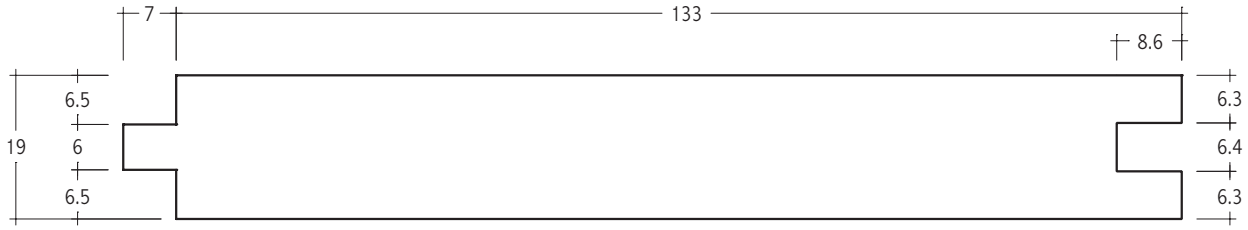

© Copyright FWPA. Published by TABMA

ACTUAL SIZE TO SCALE 01/09

WOOD NATURALLY BETTER

Baltic

FD7.1

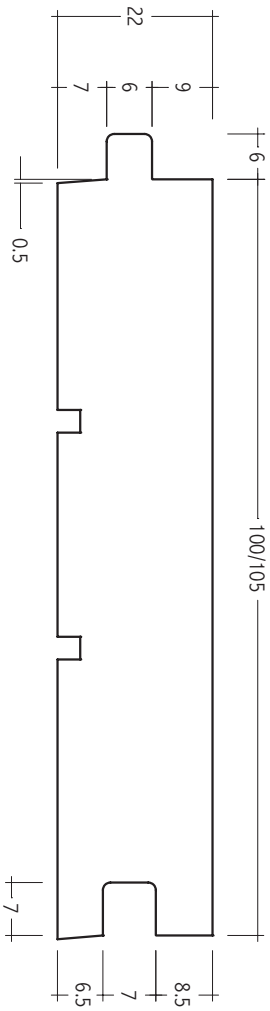

FD7.2

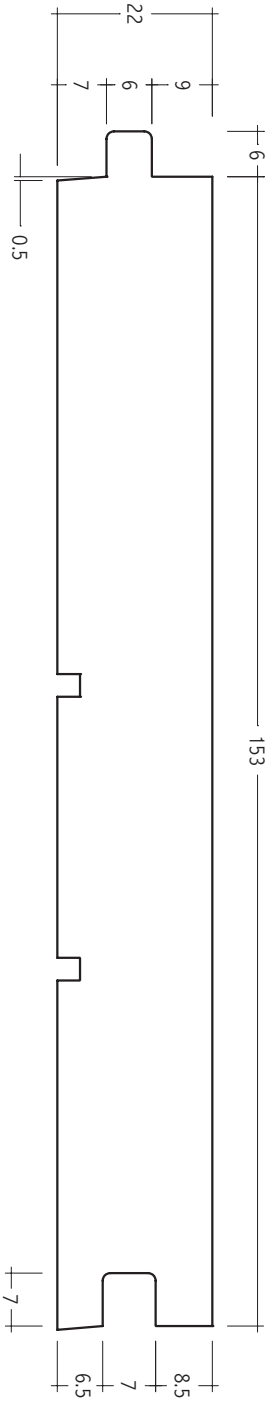

© Copyright FWPA. Published by TABMA ACTUAL SIZE TO SCALE 01/09

Decking Seasoned (based on 450mm centre)

Hardwood Reversible

FD8.1

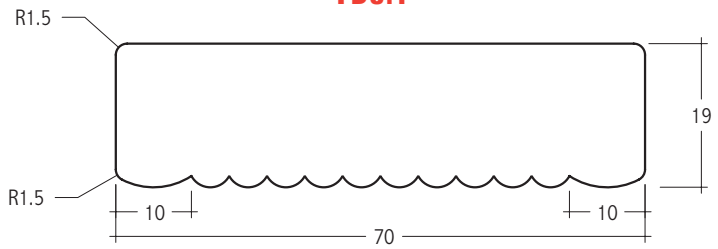

FD8.2

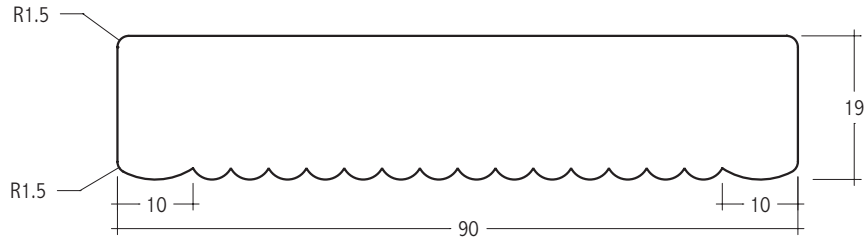

Pine Treated Reversible

FD9.1

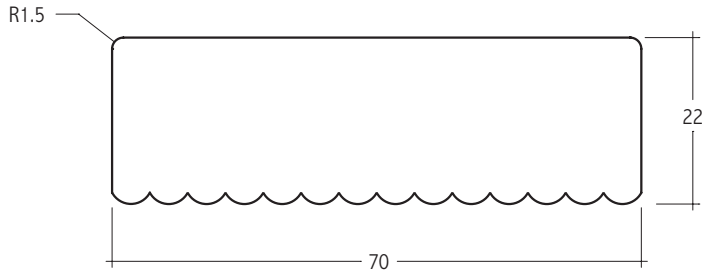

FD9.2

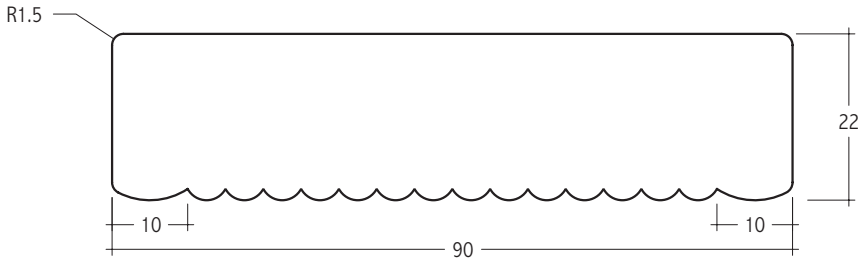

Note: Decking treated with CCA should not be used as per the Australian Standard

© Copyright FWPA. Published by TABMA ACTUAL SIZE TO SCALE 01/09

WOOD NATURALLY BETTER

Decking Seasoned (based on 450mm centre)

Hardwood Local

FD10.1

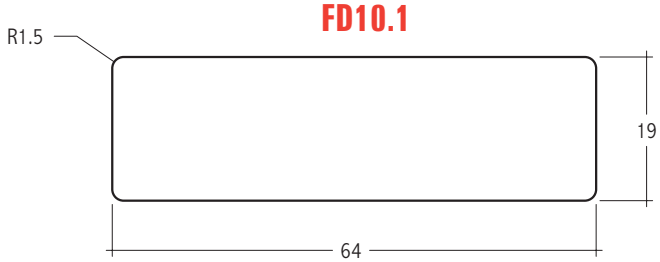

FD10.2

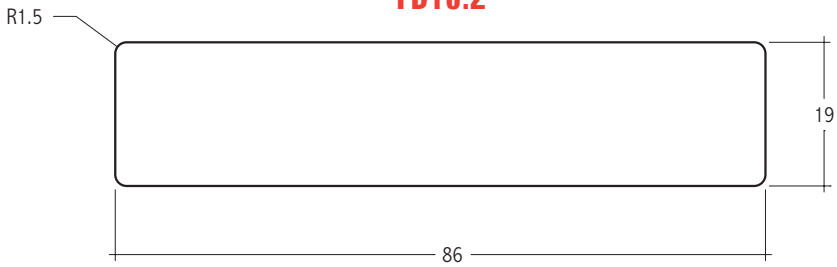

White Cypress

FD11.1

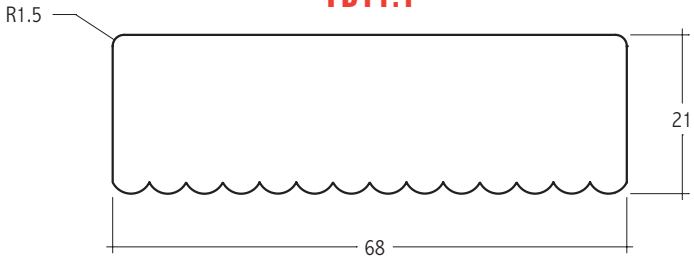

FD11.2

© Copyright FWPA. Published by TABMA

ACTUAL SIZE TO SCALE 01/09

Internal Panelling – Tongued and Grooved

Pine Seasoned
V Jointed and Centre V Groove

No. 312

L1.1

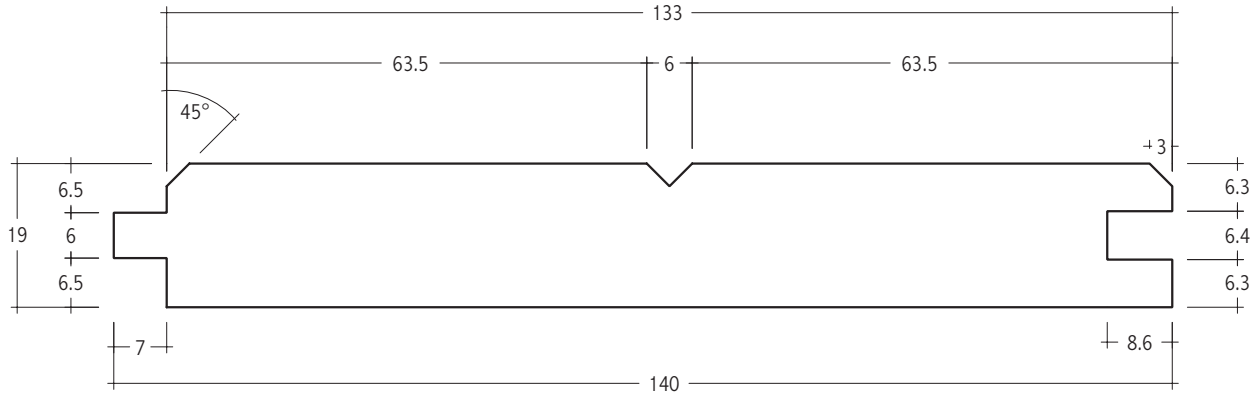

No. 315

L1.2

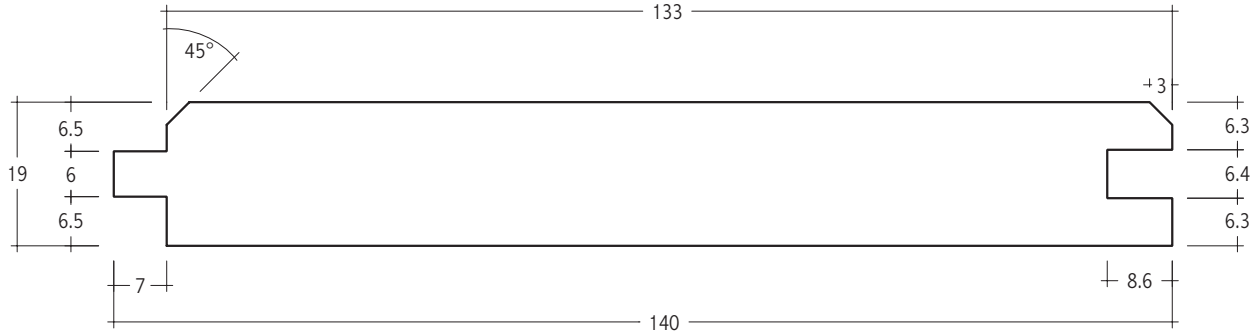

© Copyright FWPA. Published by TABMA

ACTUAL SIZE TO SCALE 01/09

WOOD NATURALLY BETTER

Internal Panelling – Tongued and Grooved

Pine Seasoned
Double V Jointed and Centre Groove

No. 301

L2.1

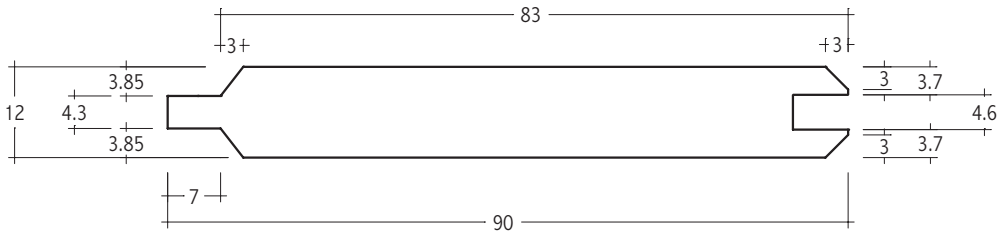

No. 302

L2.1

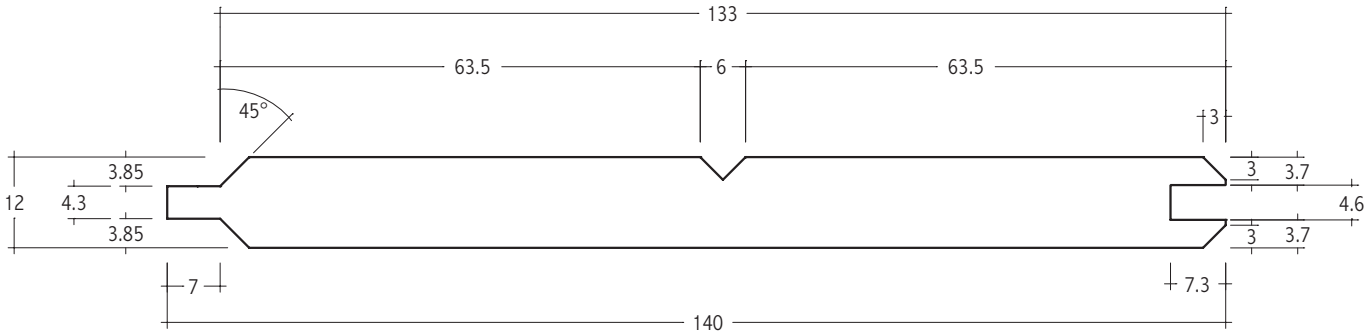

© Copyright FWPA. Published by TABMA
ACTUAL SIZE TO SCALE 01/09

Internal Panelling – Tongued and Grooved

Pine Seasoned
V Jointed – Regency
Centre Groove and Shiplap

No. 321

L3.1

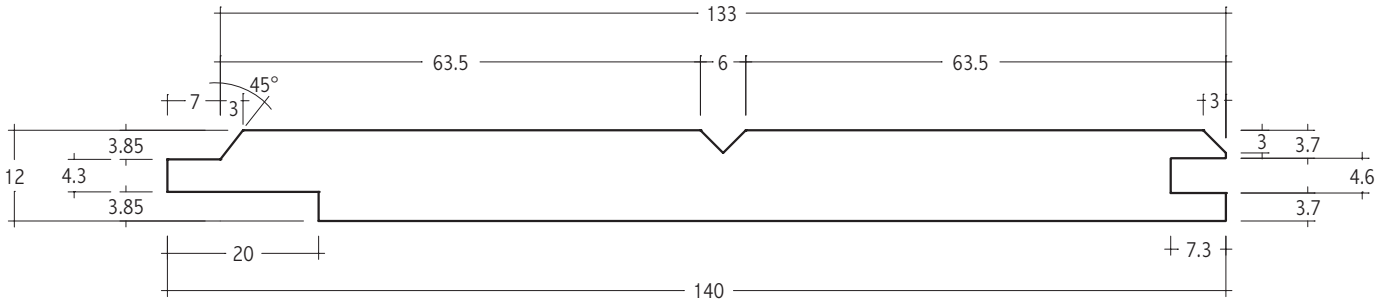

No. 322

L3.2

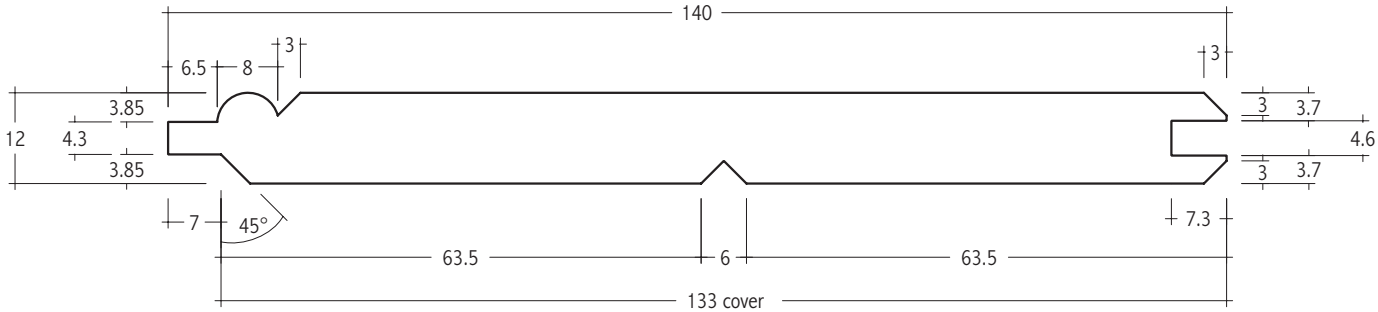

© Copyright FWPA. Published by TABMA

ACTUAL SIZE TO SCALE 01/09

WOOD NATURALLY BETTER

Western Red Cedar Seasoned and Tasmanian Oak Seasoned

V Jointed

L4.1

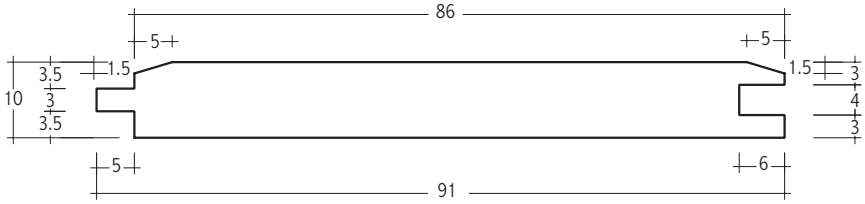

L4.2

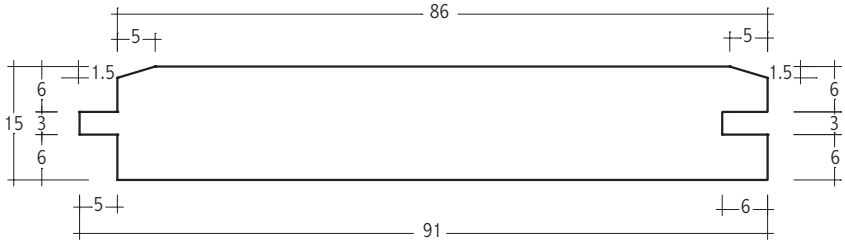

Shiplap

L5.1

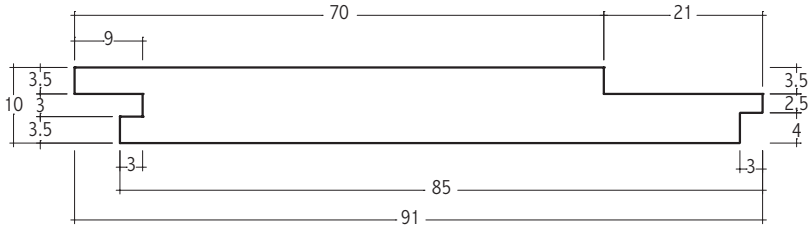

L5.2

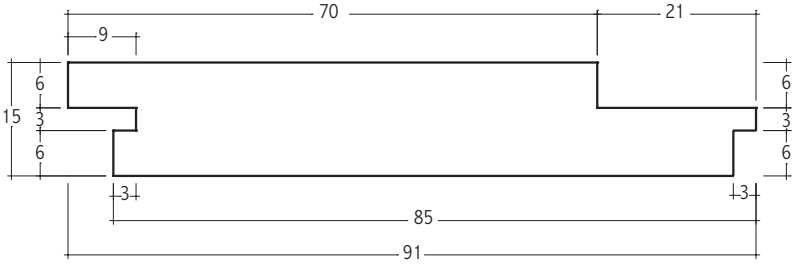

© Copyright FWPA. Published by TABMA

ACTUAL SIZE TO SCALE 01/09

Western Red Cedar Seasoned and Tasmanian Oak Seasoned

Double V Jointed and Centre V Groove

L6.1

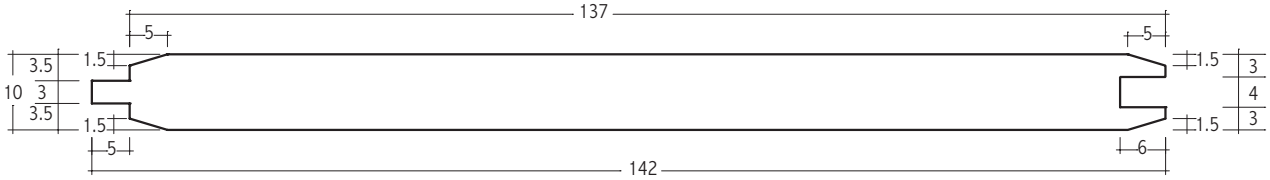

L6.2

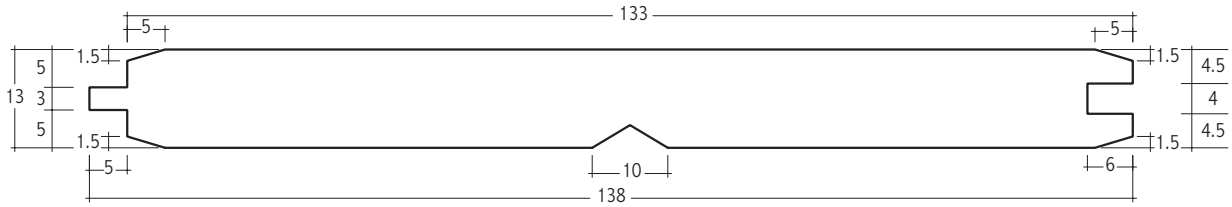

L6.3

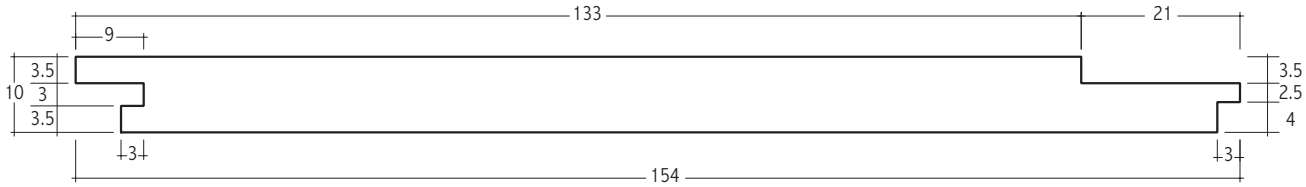

L6.4

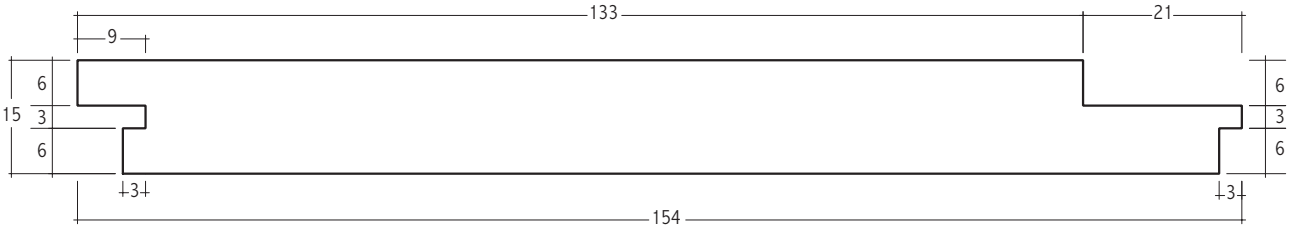

© Copyright FWPA. Published by TABMA

ACTUAL SIZE TO SCALE 01/09

WOOD NATURALLY BETTER

Western Red Cedar Seasoned and Tasmanian Oak Seasoned

Regency V Joined L7

L7

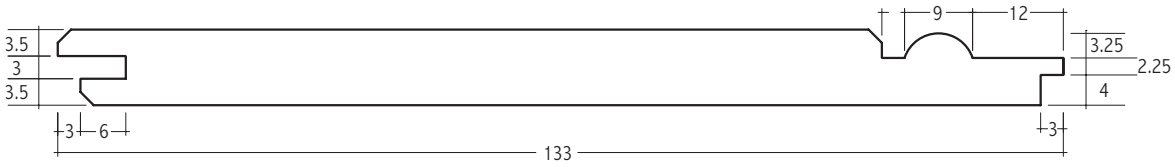

© Copyright FWPA. Published by TABMA

Handrails

IS1 66 x 41

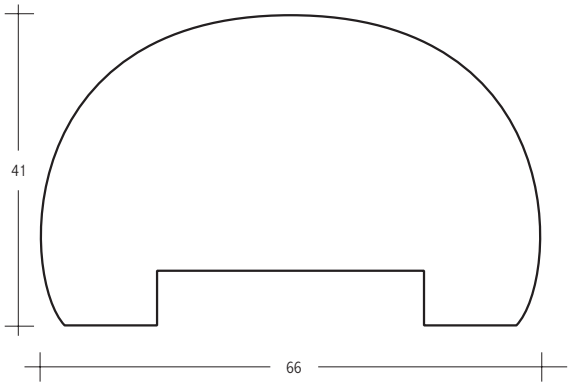

IS2 66 x 41

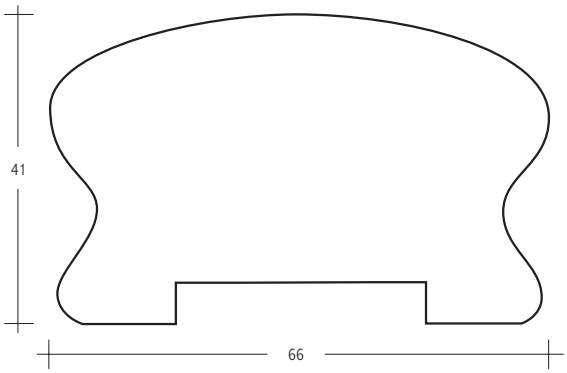

IS3 65 x 65

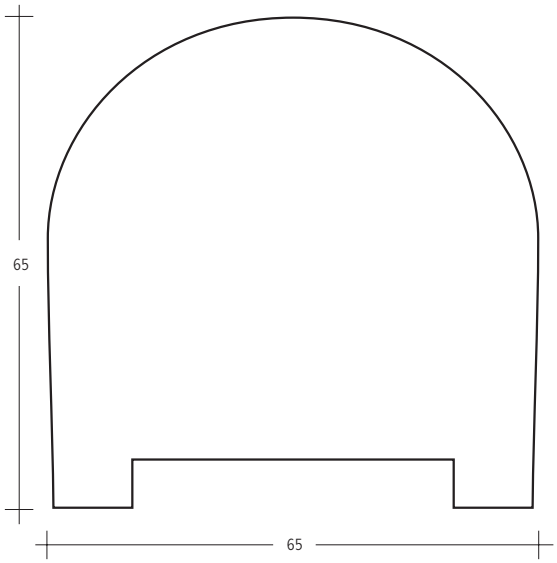

NB Inside grooving can vary between 12, 16, 38, 42, and 44mm width and 8mm depth.

© Copyright FWPA. Published by TABMA

ACTUAL SIZE TO SCALE 01/09

WOOD NATURALLY BETTER

Handrails

IS4 65 x 65

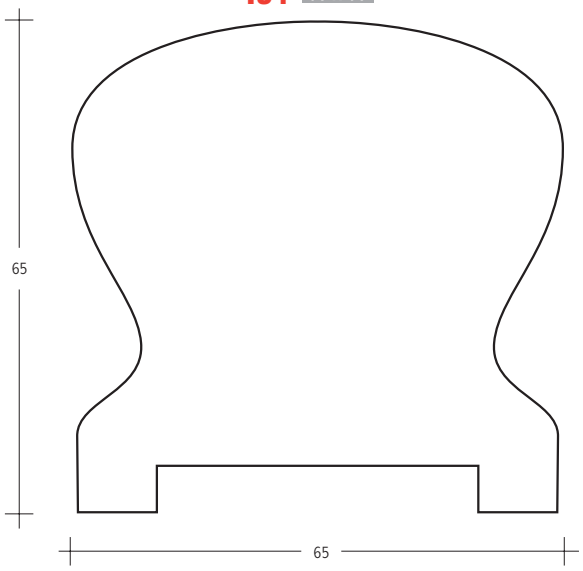

IS5 80 x 65

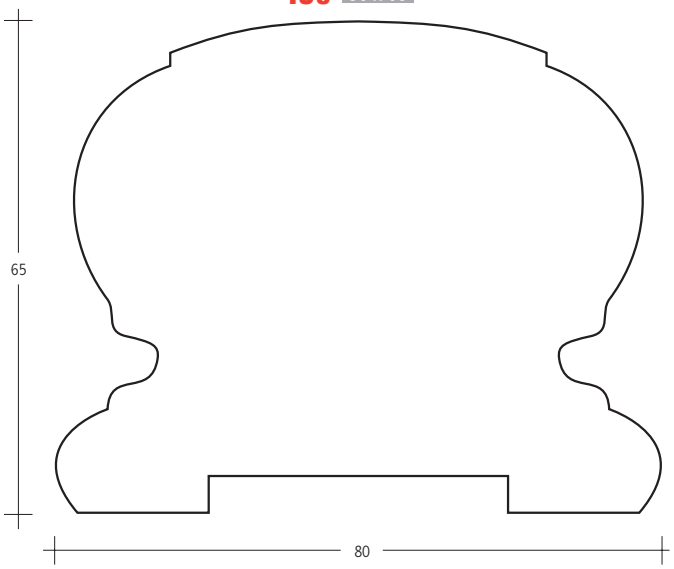

© Copyright FWPA. Published by TABMA

Handrails

IS6 80 x 65

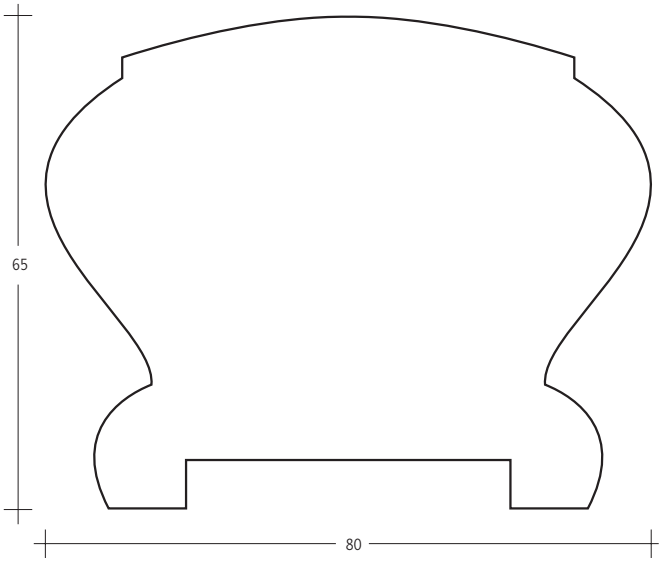

IS7 65 x 65

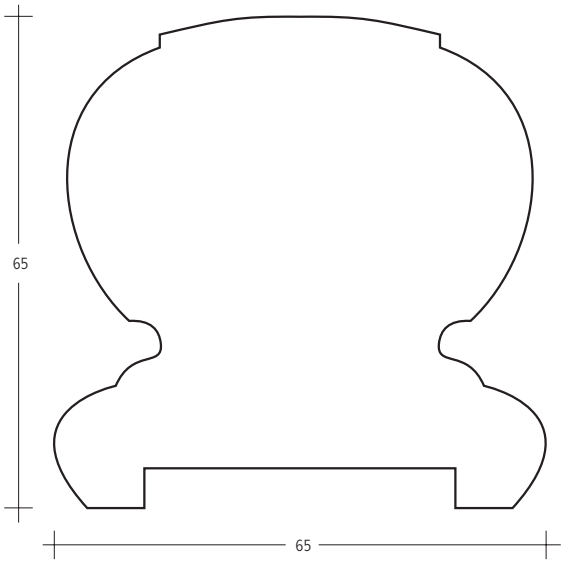

NB Inside grooving can vary between 12, 16, 38, 42, and 44mm width and 8mm depth.

© Copyright FWPA. Published by TABMA

75 mm Door Framing & Jambs

J1

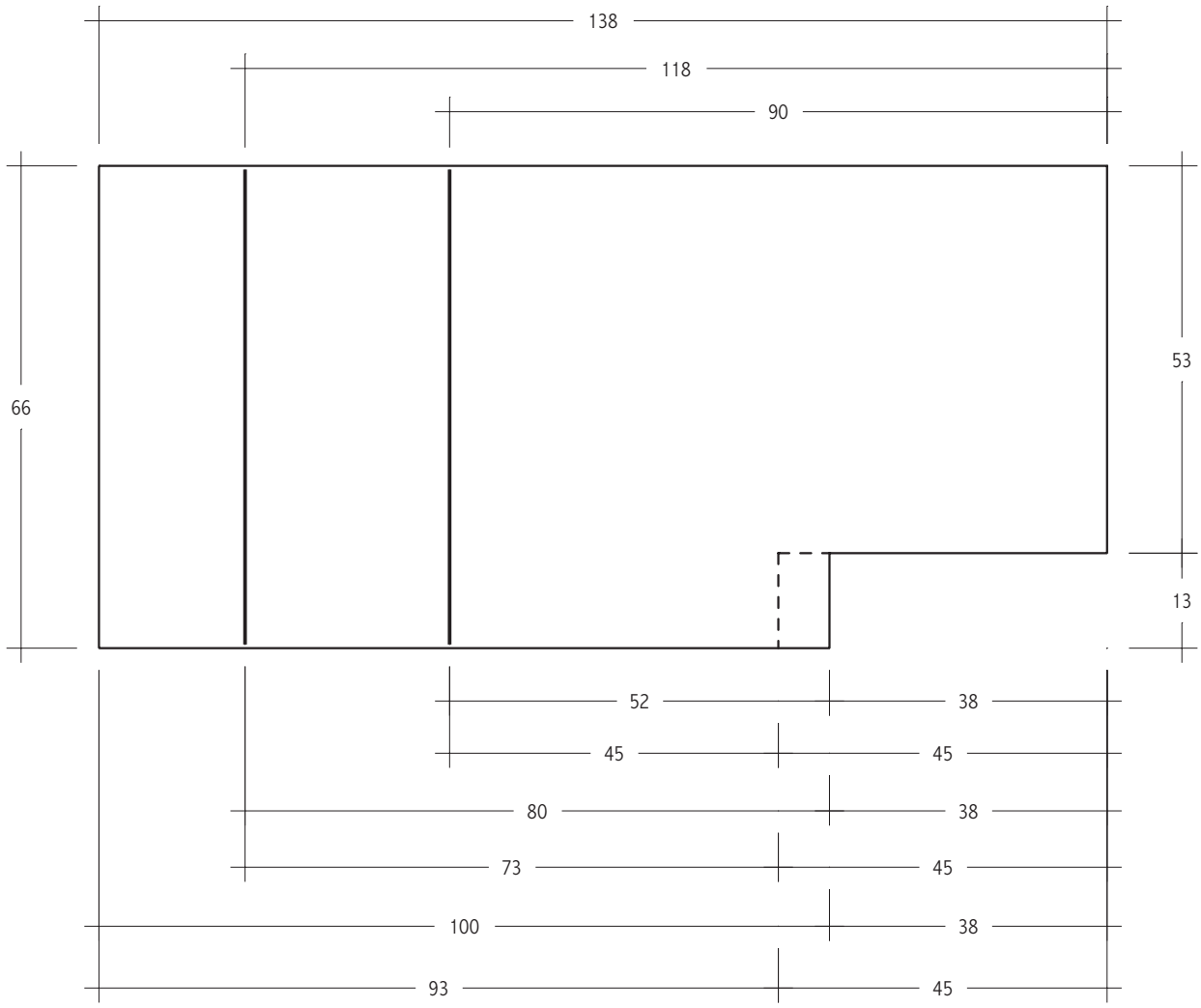

© Copyright FWPA. Published by TABMA

75 mm door Mullions

J2

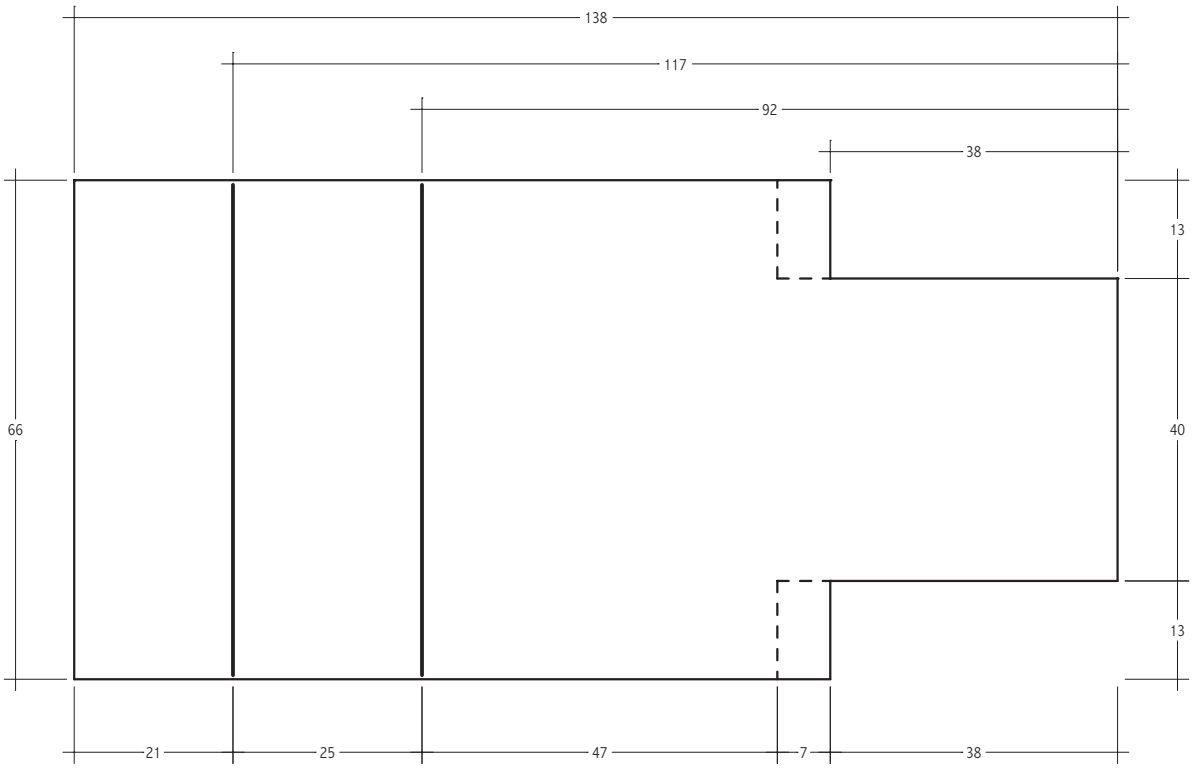

© Copyright FWPA. Published by TABMA

ACTUAL SIZE TO SCALE 01/09

WOOD NATURALLY BETTER

50 mm Door Framing & Jambs

J3

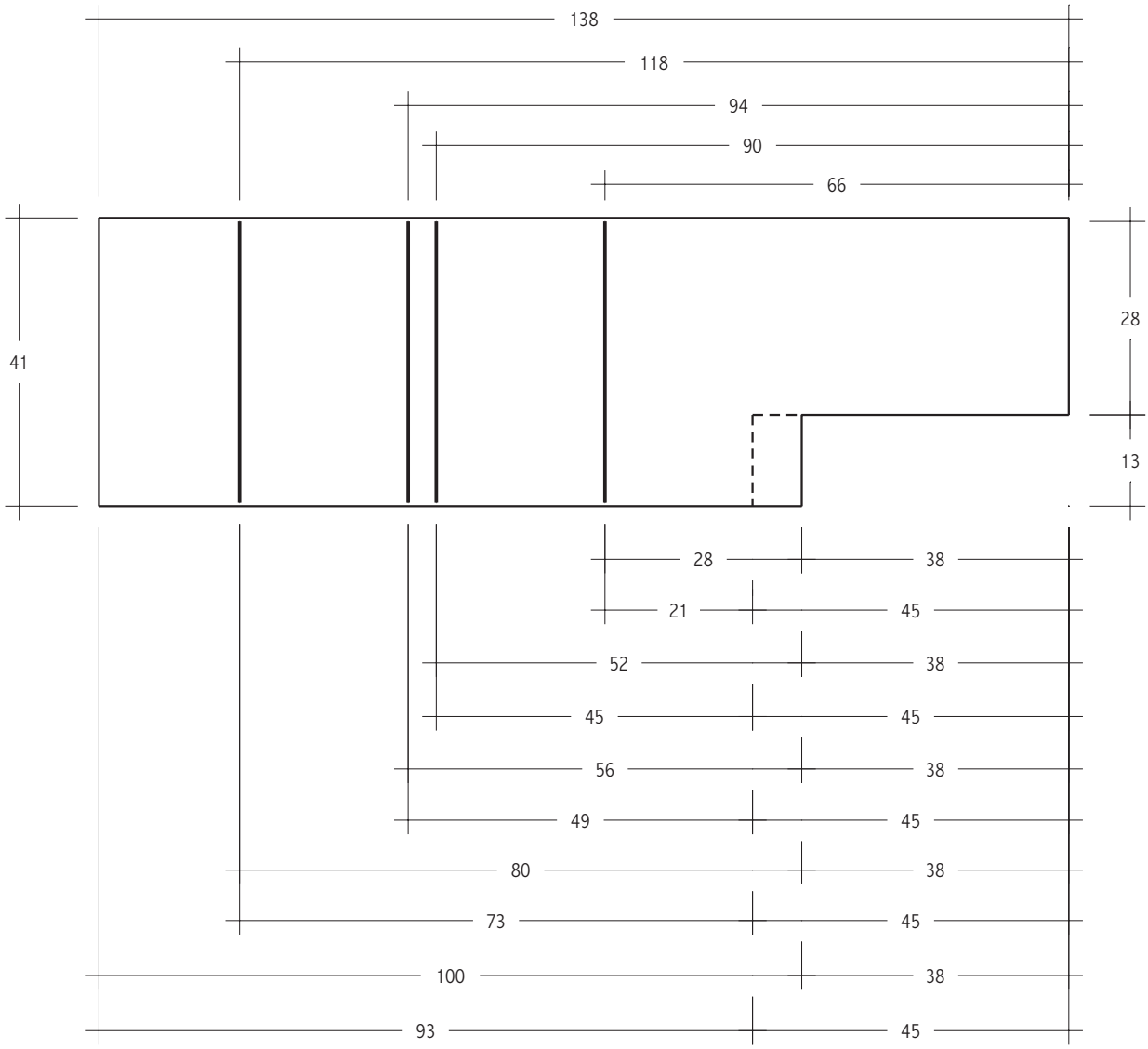

© Copyright FWPA. Published by TABMA

30 mm Jamb Lining

J5

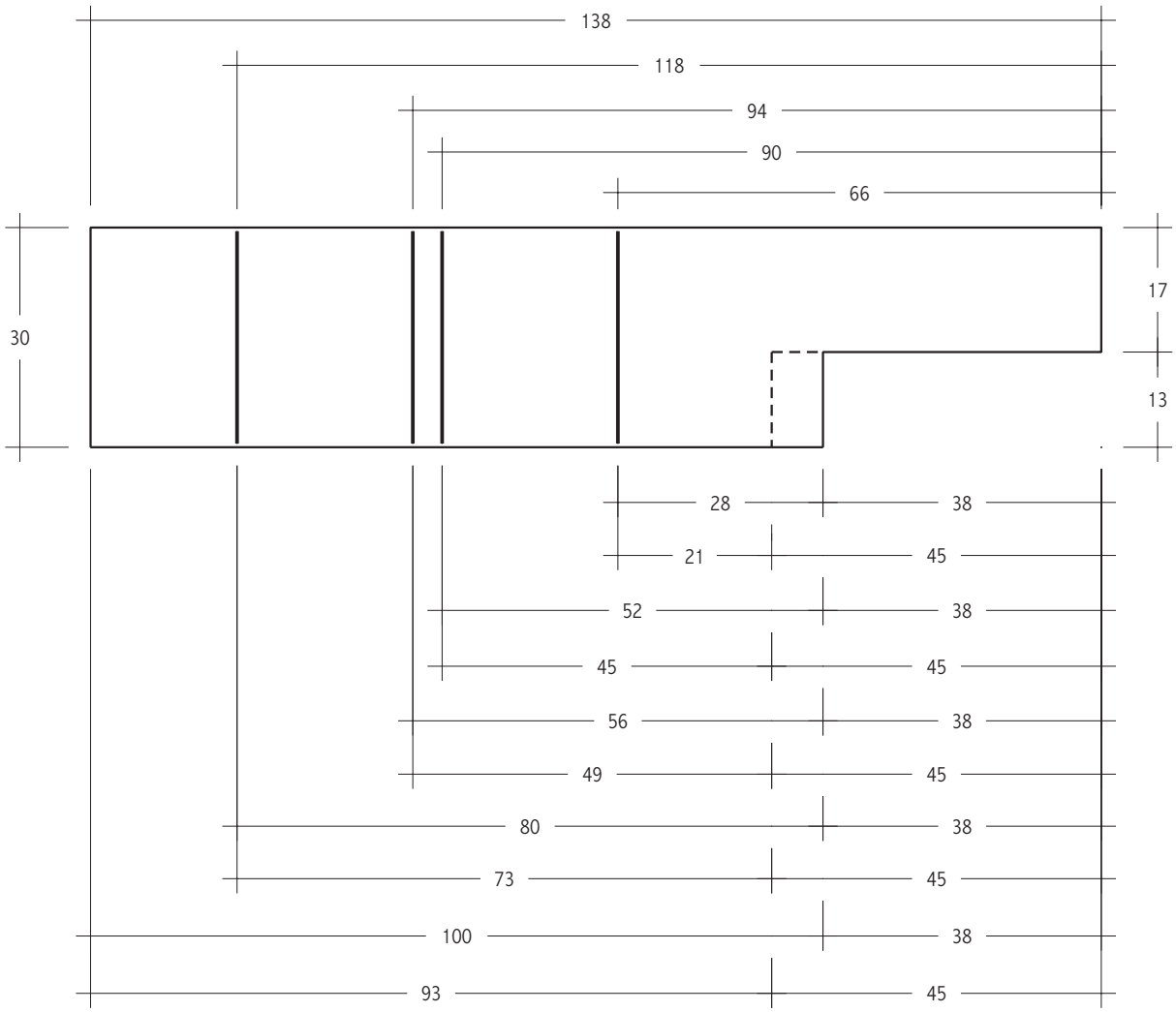

© Copyright FWPA. Published by TABMA

ACTUAL SIZE TO SCALE 01/09

WOOD NATURALLY BETTER

Casement Sills

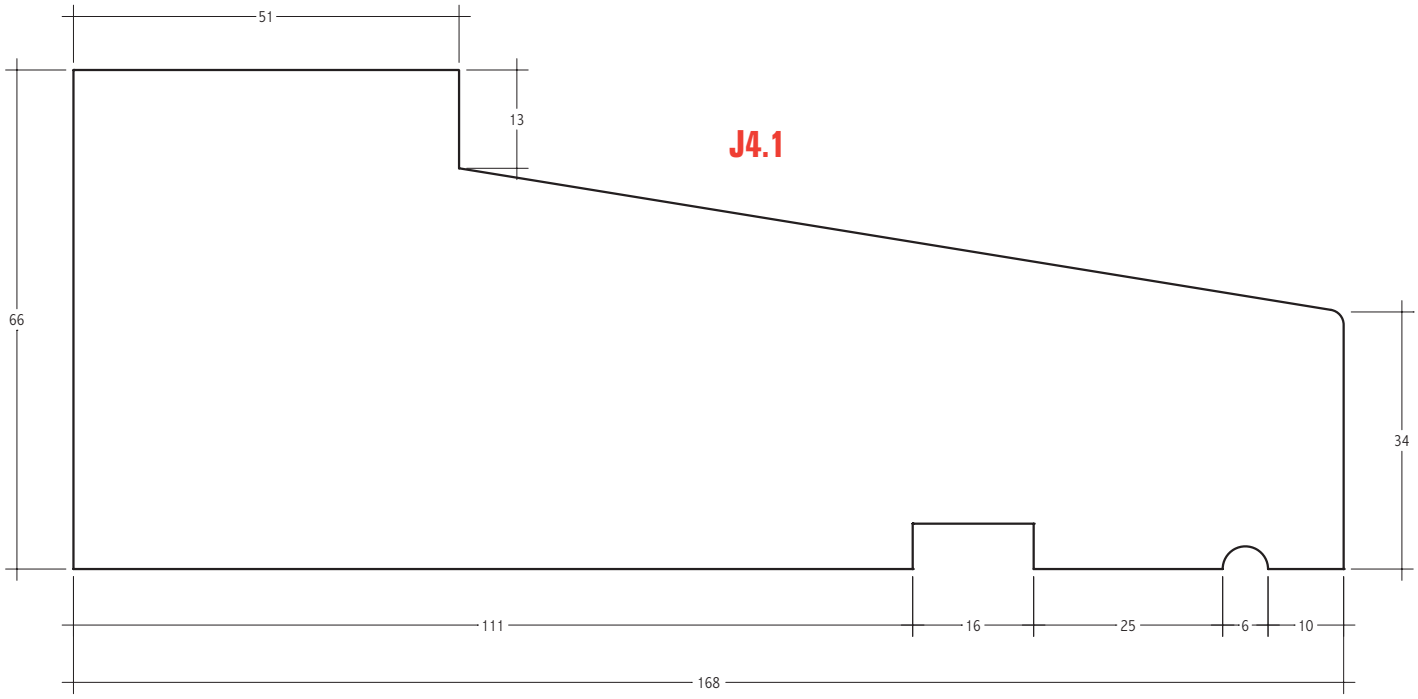

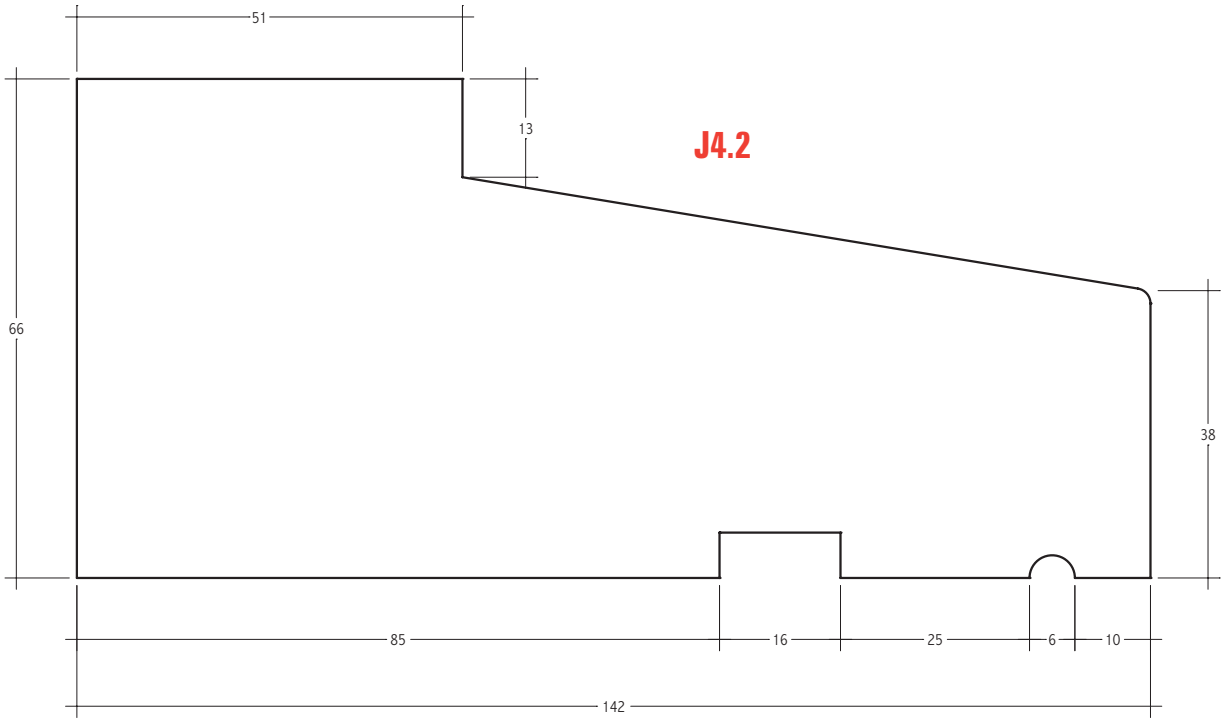

© Copyright FWPA. Published by TABMA

ACTUAL SIZE TO SCALE 01/09

WOOD NATURALLY BETTER

30 mm Jamb FJ Pine only

J6

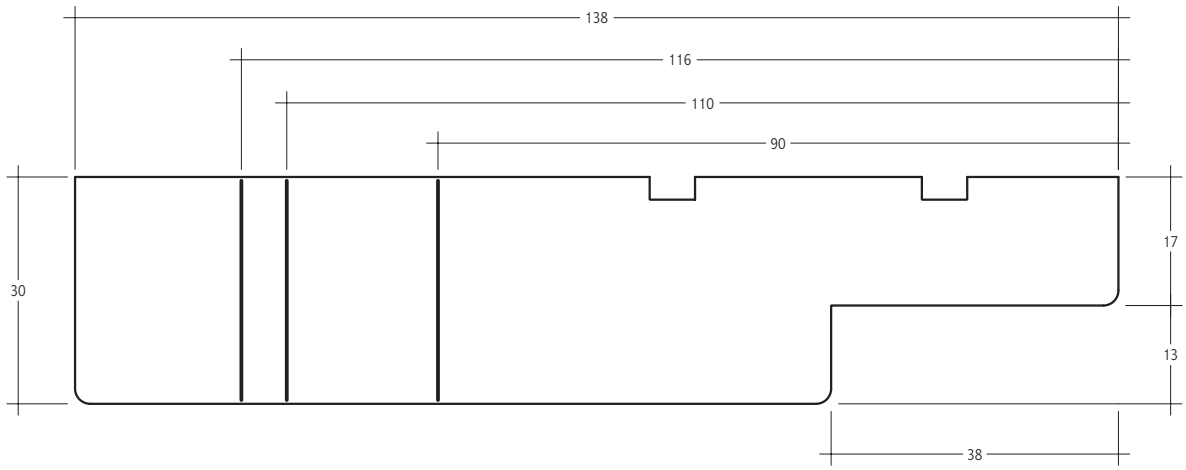

38 mm Threshold

J7

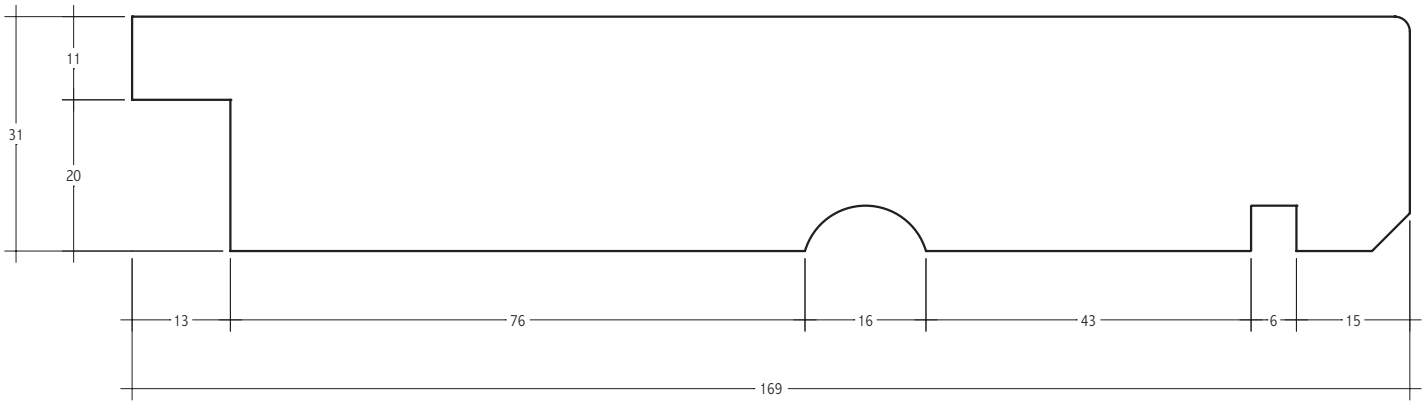

© Copyright FWPA. Published by TABMA

ACTUAL SIZE TO SCALE 01/09

WOOD NATURALLY BETTER

Detail Of Box Frame Material and 38mm Sash Stock

Vertical Section through Sill Sashes and Head

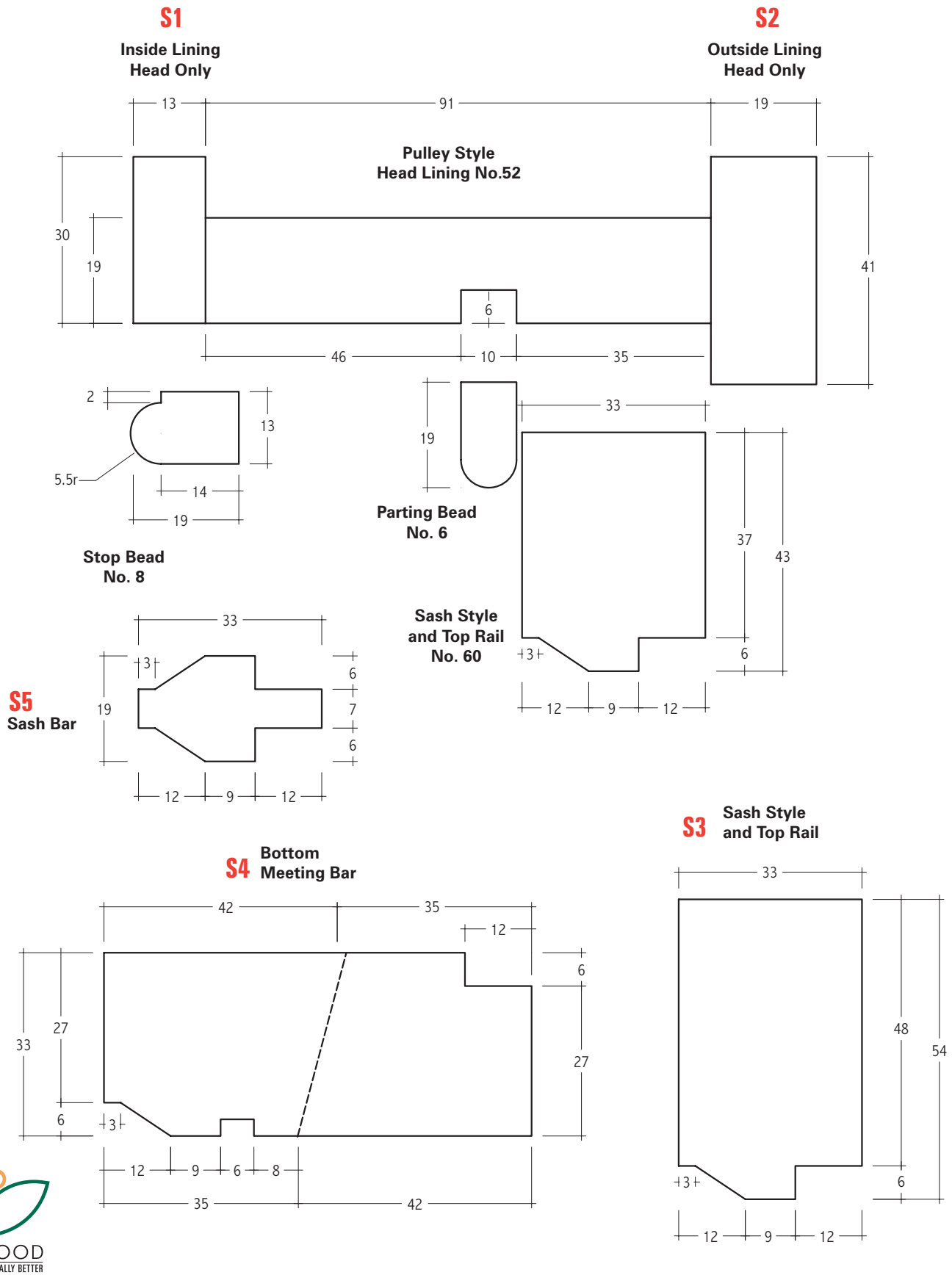

© Copyright FWPA. Published by TABMA ACTUAL SIZE TO SCALE 01/09

Vertical Section through Sill Sashes and Head

S6 Bottom Rail

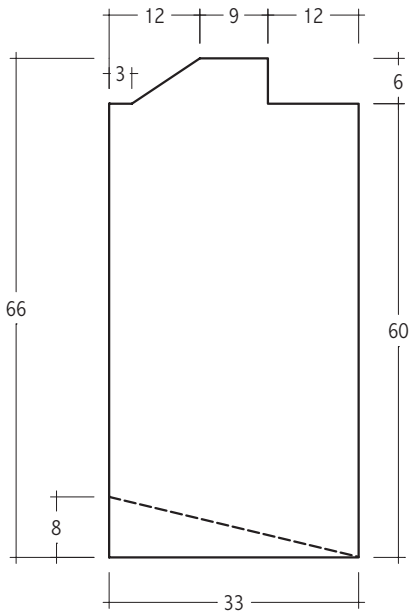

S7 Bottom Rail

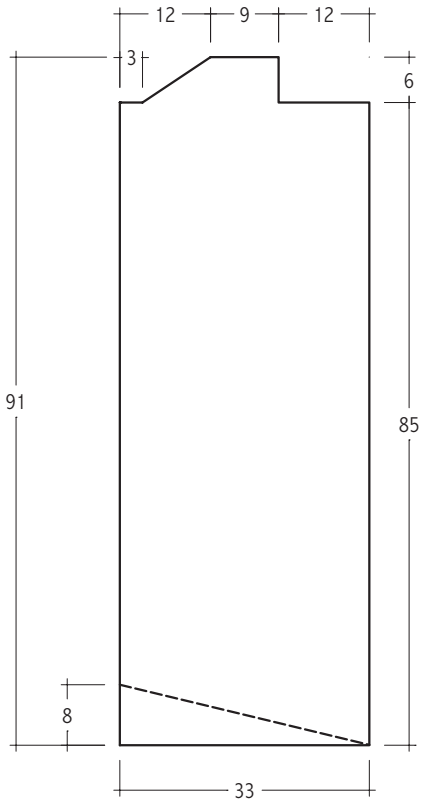

NOTE: Underside if bottom rail splayed when fitting sash

S8 Box Frame Sill

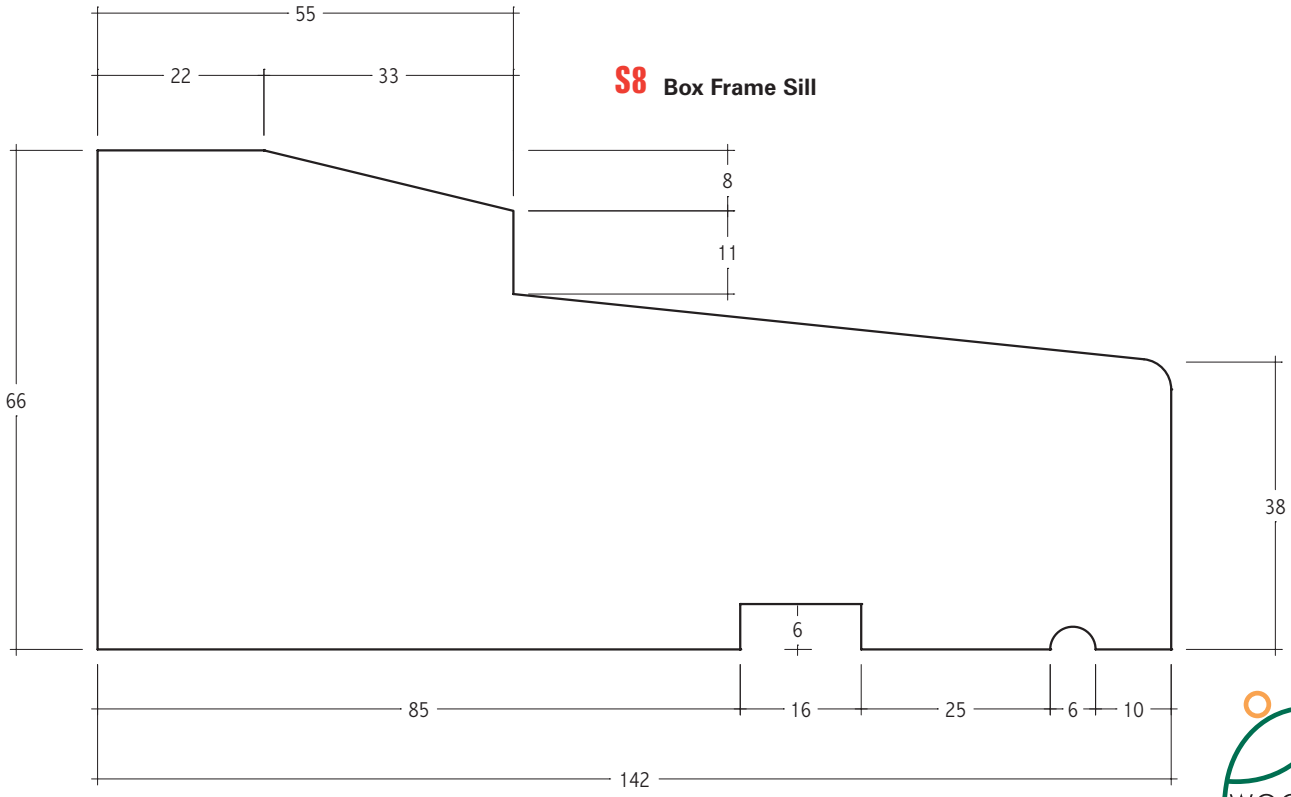

© Copyright FWPA. Published by TABMA

ACTUAL SIZE TO SCALE 01/09

WOOD NATURALLY BETTER

Detail Of Box Frame Material and 38mm Sash Stock (cont.)

Section through Mullion

NOTE: This detail is suitable for round cast iron weights

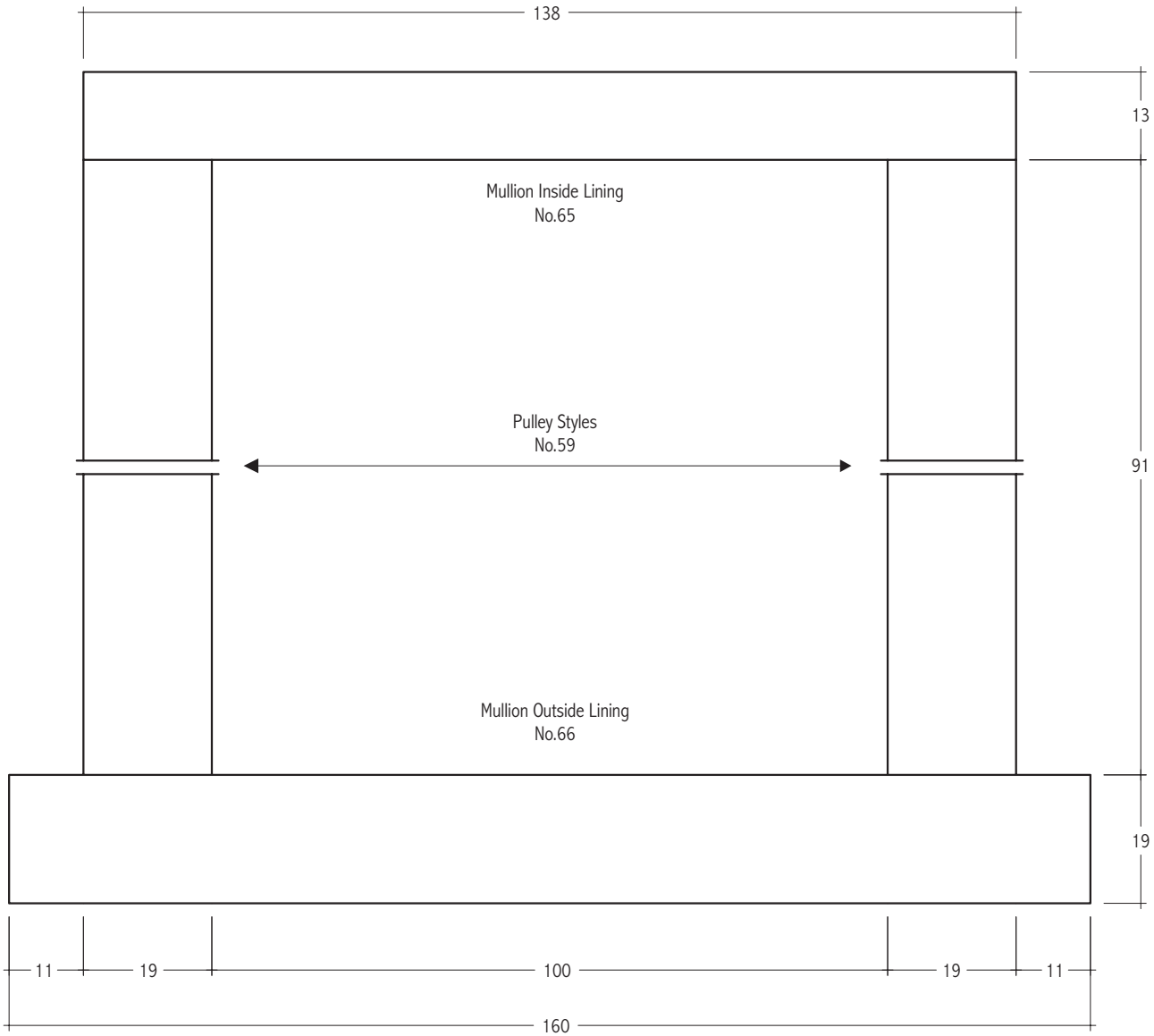

© Copyright FWPA. Published by TABMA

Section through Mullion

NOTE: This detail is suitable for lead weights

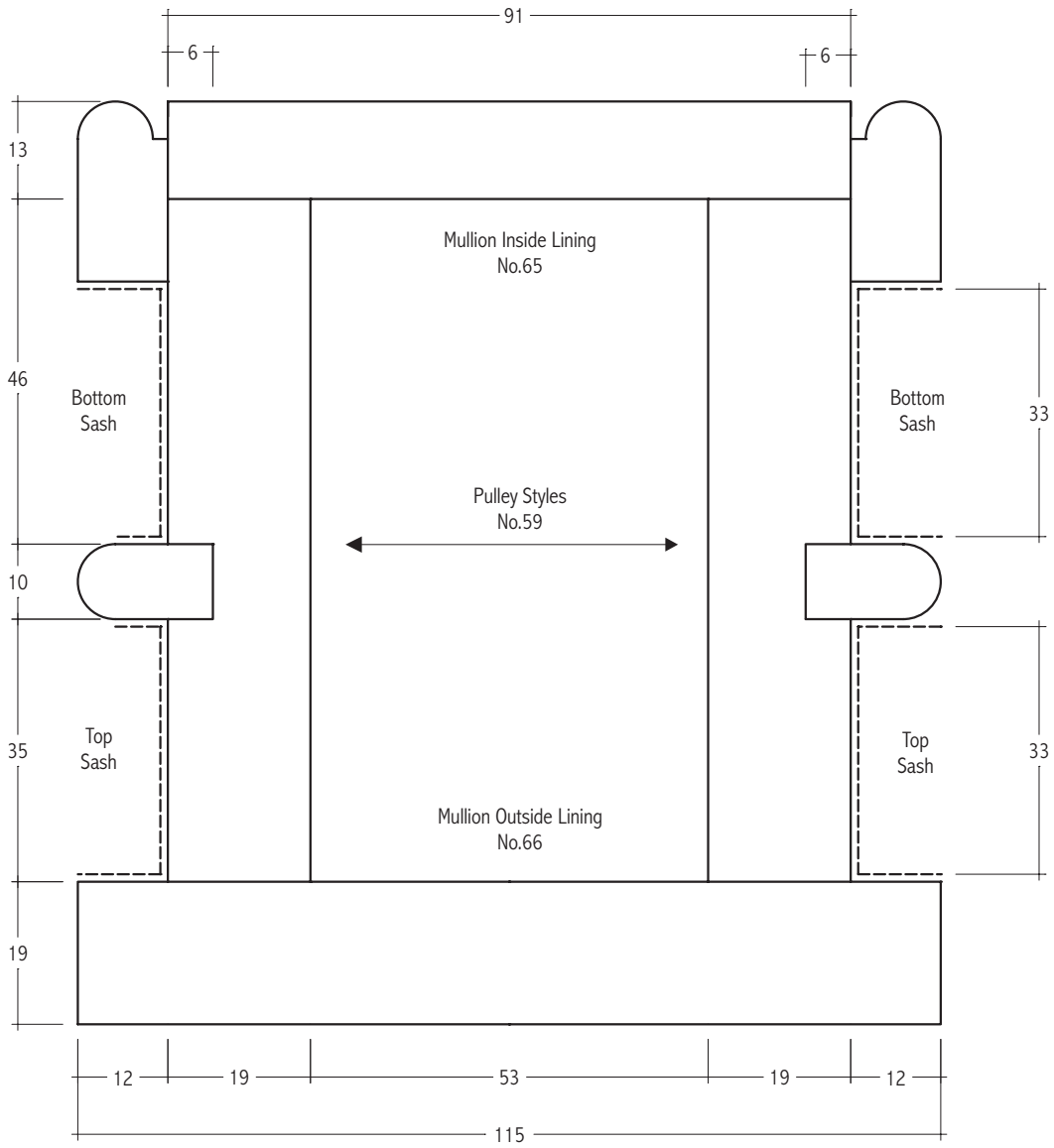

© Copyright FWPA. Published by TABMA

ACTUAL SIZE TO SCALE 01/09

WOOD NATURALLY BETTER

Detail Of Box Frame Material and 38mm Sash Stock (cont.)

Section through Left Hand Box

NOTE: Back lining for brick buildings only

S9 Inside Lining

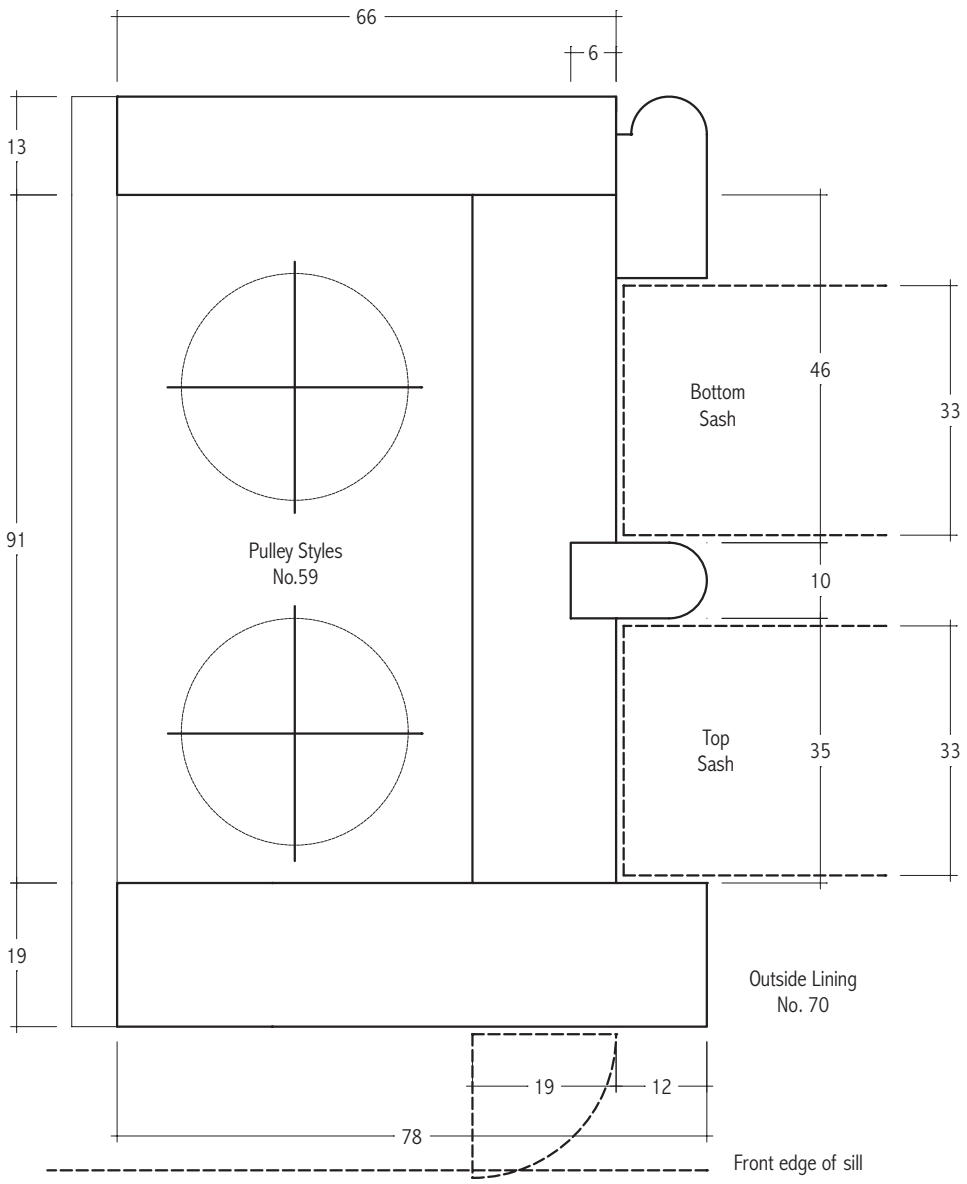

© Copyright FWPA. Published by TABMA

Vertical Section through Sill Sashes and Head

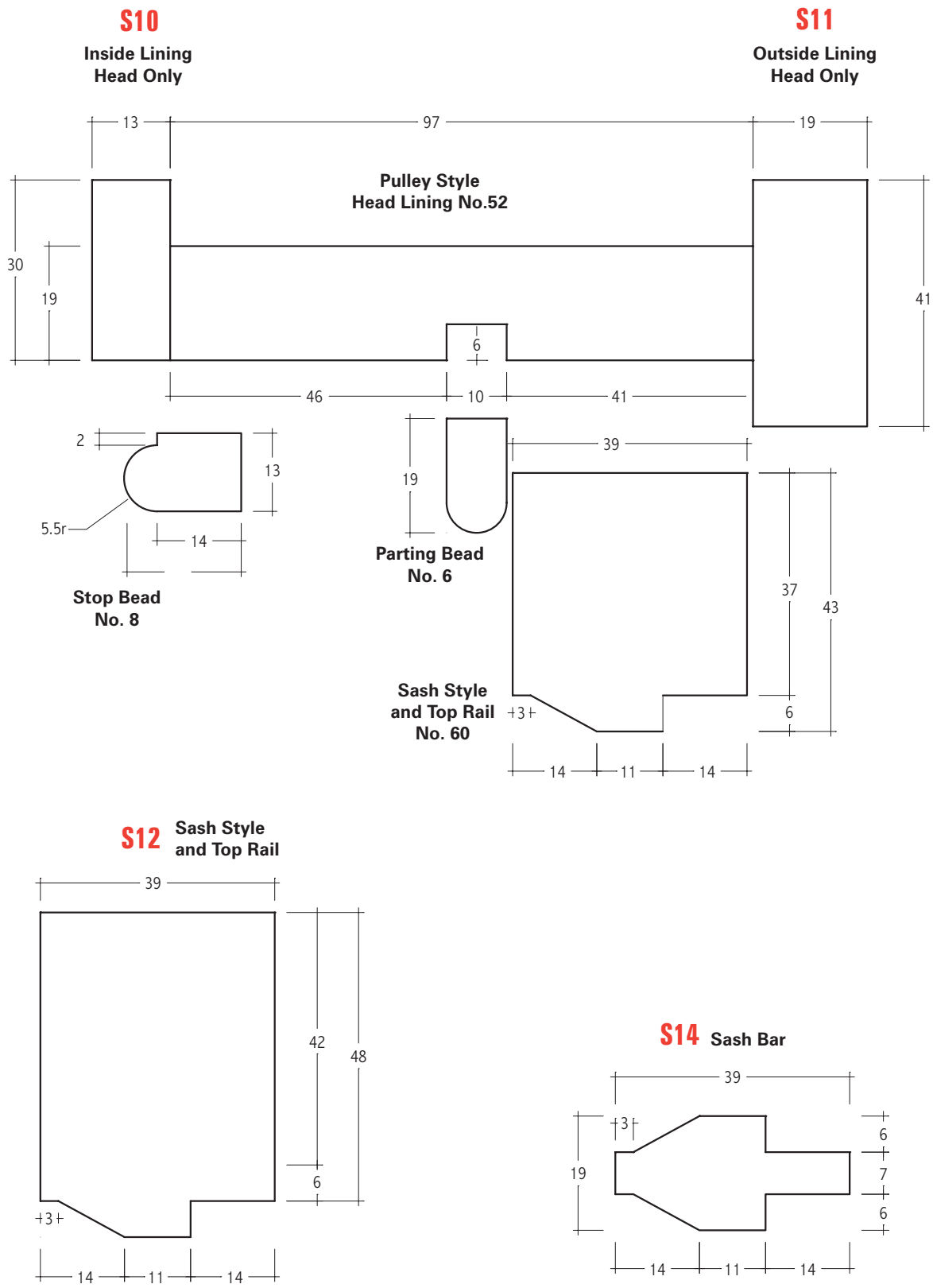

© Copyright FWPA. Published by TABMA ACTUAL SIZE TO SCALE 01/09

WOOD NATURALLY BETTER

Detail Of Box Frame Material and 44mm Sash Stock (cont.)

Vertical Section through Sill Sashes and Head

S13 Bottom Meeting Bar

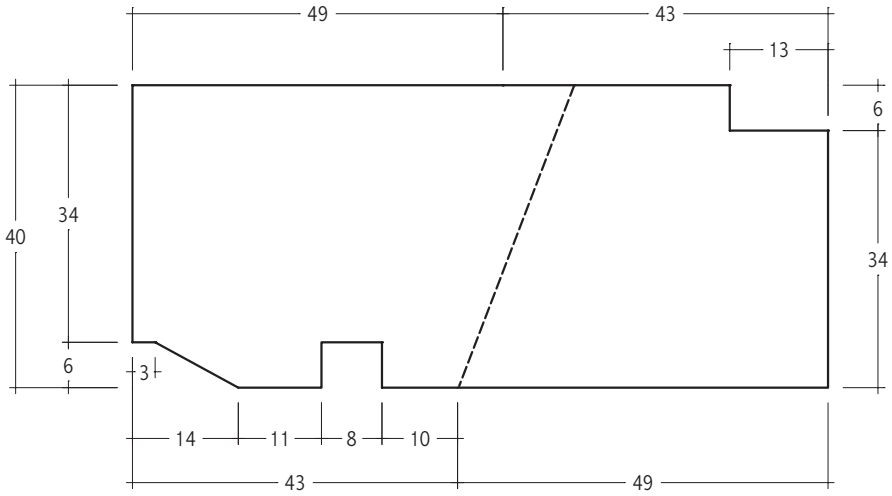

S15 Bottom Rail

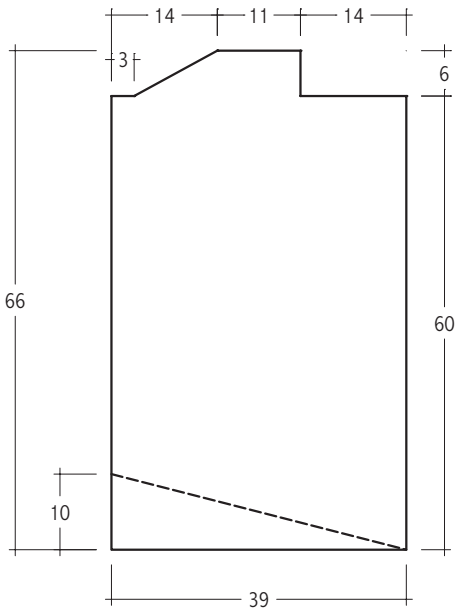

S16 Bottom Rail

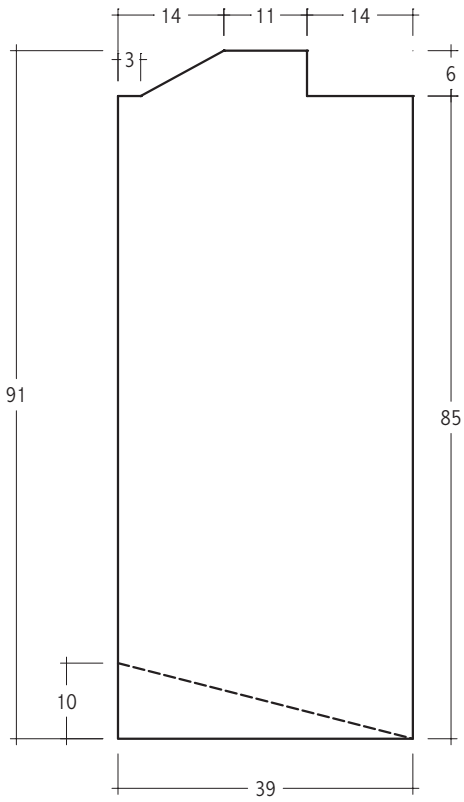

NOTE: Underside if bottom rail splayed when fitting sash

© Copyright FWPA. Published by TABMA

ACTUAL SIZE TO SCALE 01/09

WOOD NATURALLY BETTER

Vertical Section through Sill Sashes and Head

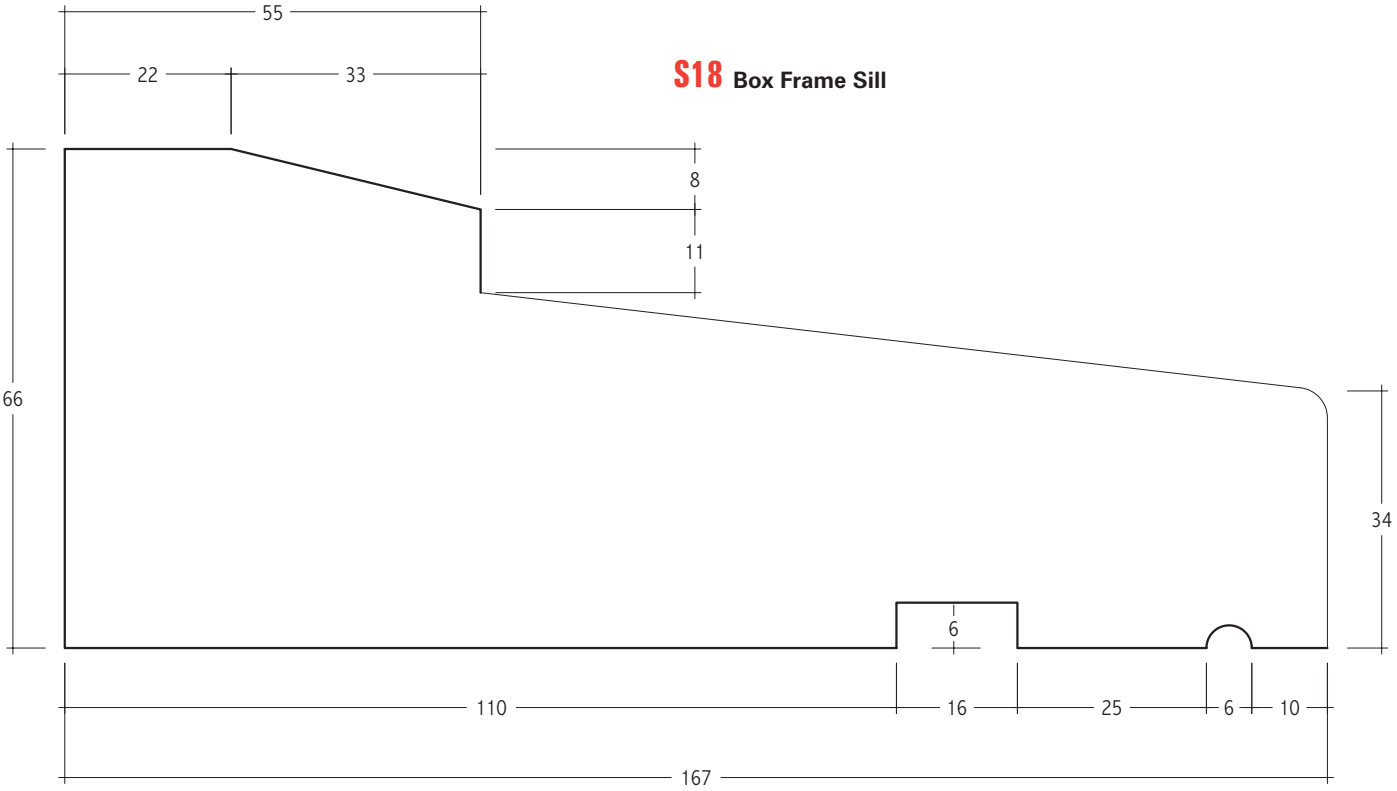

© Copyright FWPA. Published by TABMA

ACTUAL SIZE TO SCALE 01/09

WOOD NATURALLY BETTER

Section through Mullion

NOTE: This detail is suitable for round cast iron weights

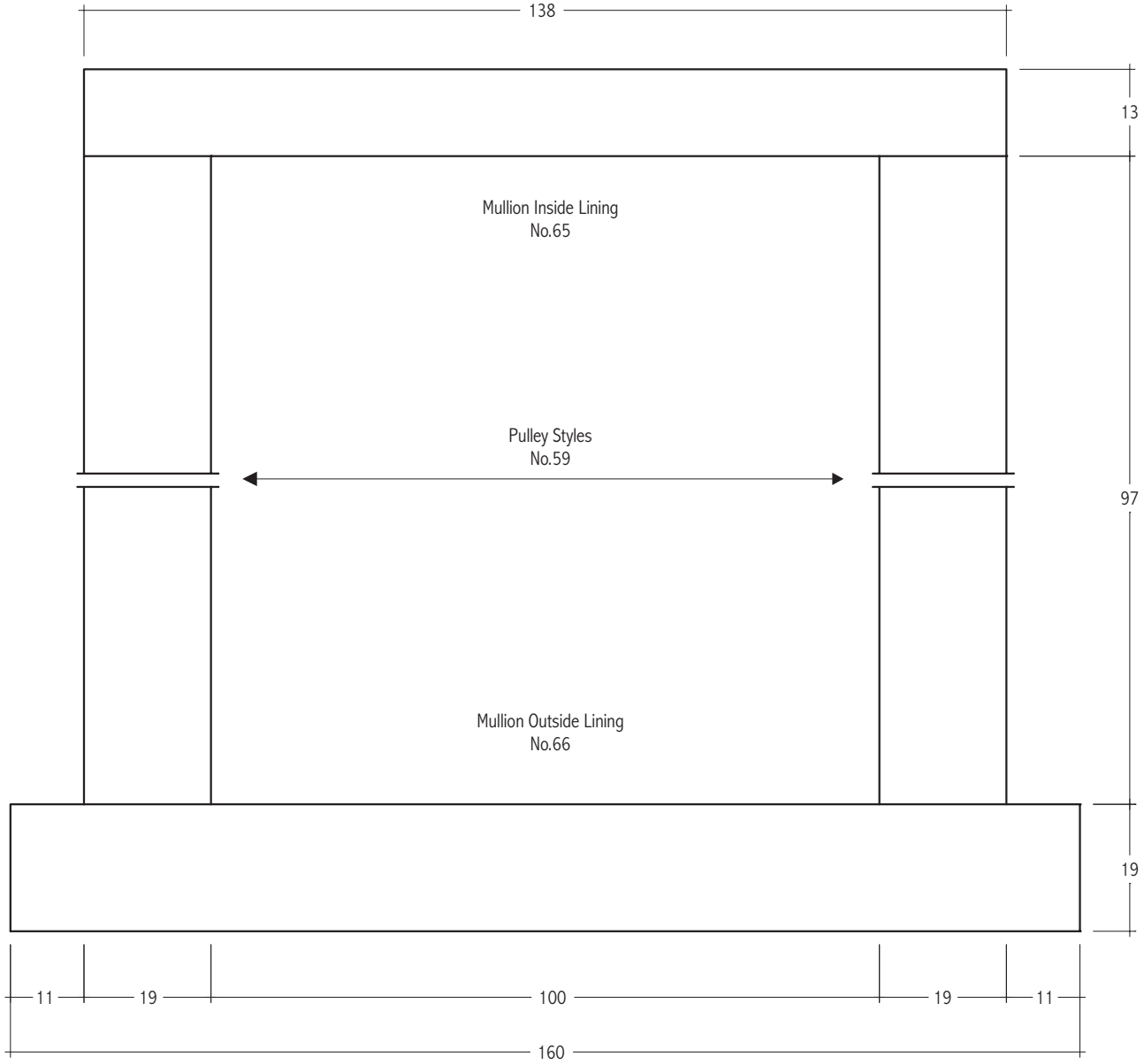

© Copyright FWPA. Published by TABMA

Section through Mullion

NOTE: This detail is suitable for lead weights

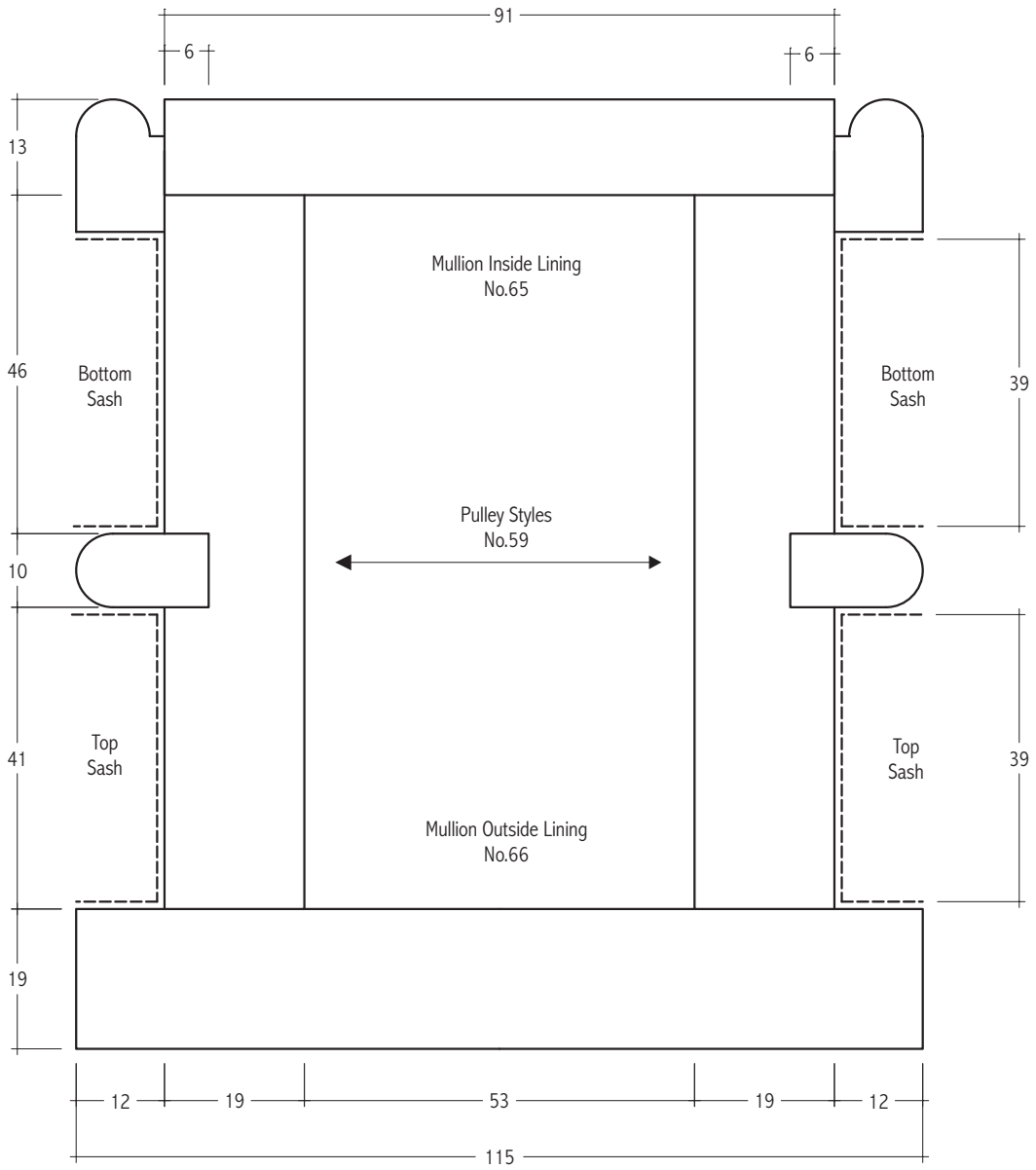

© Copyright FWPA. Published by TABMA

ACTUAL SIZE TO SCALE 01/09

WOOD NATURALLY BETTER

Detail Of Box Frame Material and 44mm Sash Stock (cont.)

Section through Left Hand Box

NOTE: Back lining for brick buildings only

S17 Inside Lining

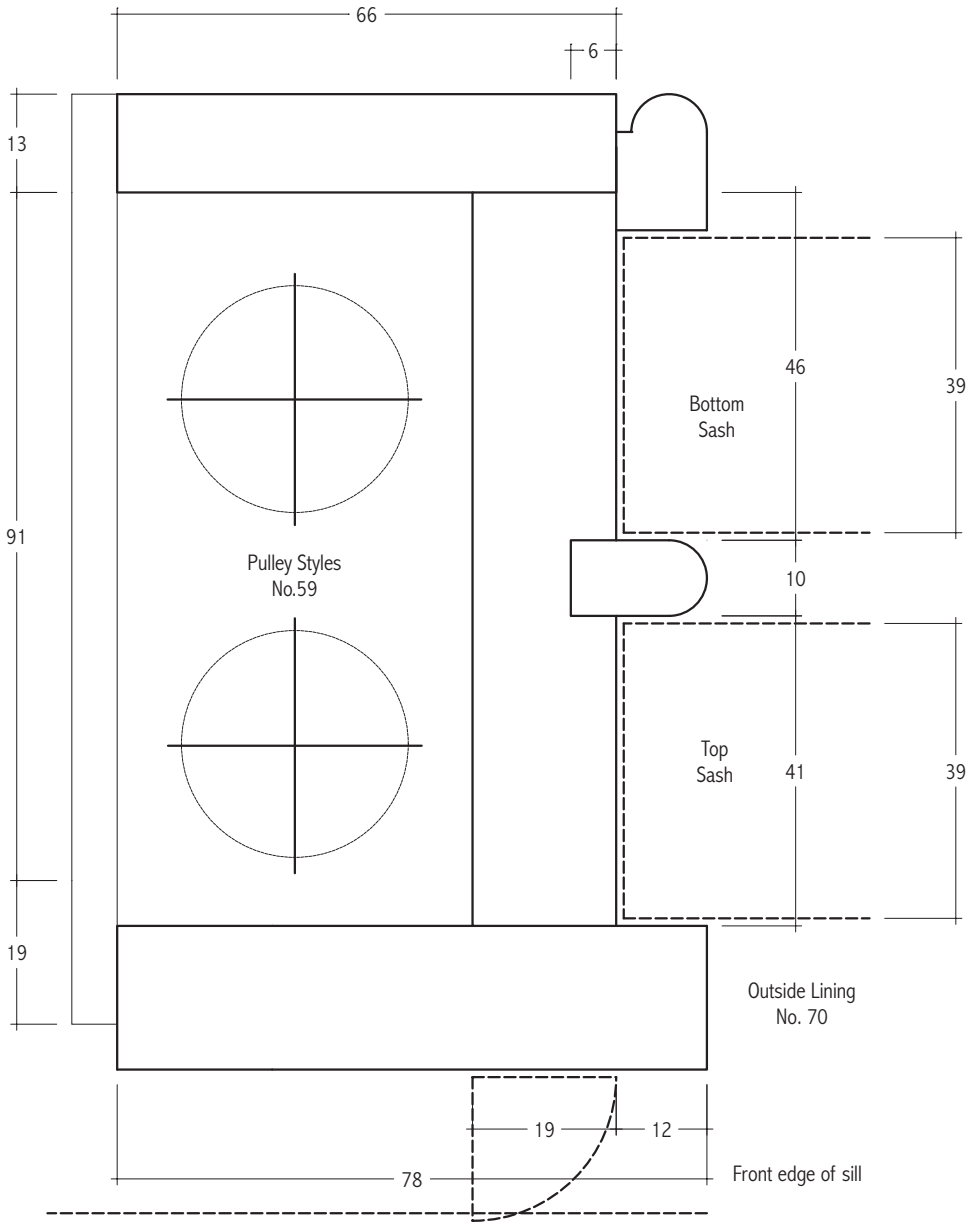

© Copyright FWPA. Published by TABMA

This page intentionally left blank

© Copyright FWPA. Published by TABMA 01/09

Type of Treatments Available

The treatments used to protect pine vary depending on where and how the timber will be used. The most common outdoor treatments are Copper Chrome Arsenate (CCA), Alkaline Copper Quaternary (ACQ) and Light Organic Solvent Preservative (LOSP). A different strength LOSP is also used for internal applications (house framing) along with H2F treatments such as bifenthrin.

CCA (external)

- Copper chrome arsenate
- 40 year warranty
- H3 to H5
- Code = 01, 02, 03, 53 or 54

ACQ (external)

- Alkaline Copper Quaternary
- 40 year warranty
- H3 to H4
- Code = 90

TAN E (external)

- Copper Azole
- 40 year warranty
- H3 to H4
- Code = 58

LOSP (internal and external)

- Light Organic Solvent Preservative
- 25 year warranty
- H2 or H3
- Codes = 19, 24, 25, 39, 41, 48, 49, 62, 70, 71, 72

Bifenthrin (internal) generally coloured blue

- 25 year warranty
- H2F
- Code = 75

End-tags/burn brands/ink stamps indicate what treatment has been used and the hazard level to which the timber has been treated.

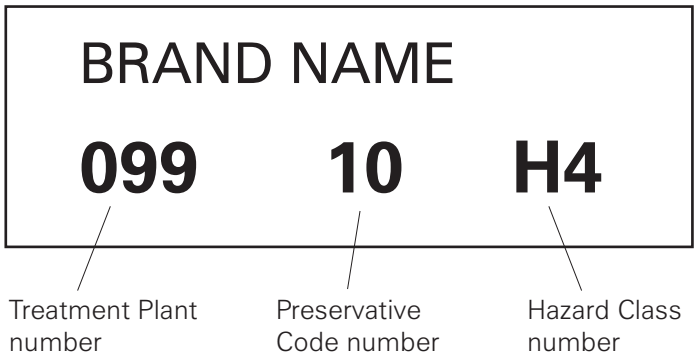

CCA treated timber is suitable for all applications ***except*** domestic decking boards, handrails, children's playground equipment, picnic tables and external seating

WOOD NATURALLY BETTER

© Copyright FWPA. Published by TABMA 01/09

✓ Still OK

Timber treated with CCA can still be used for:

- All deck framing
- Fencing
- Screens
- Structural timbers
- Cladding
- Fascias
- Battening
- Retaining walls
- Pergolas
- Posts
- Piles
- Utility poles and cross-arms
- Vineyard posts

✗ Not OK

Timber treated with CCA can no longer be used for:

- Children's play equipment
- Garden furniture
- Picnic tables
- External seating
- Domestic decking boards
- Handrails

- All treated timber manufactured by reputable companies and handled correctly is safe.
- CCA treated timber has been used world-wide for more than 70 years without evidence of harm to human or environmental health.
- After a 2 year review the government regulatory body APVMA found "there was no compelling evidence from the available data to conclude that there was likely to be an unacceptable risk to public health from exposure to arsenic from CCA-treated timber"
- That there was no recommendation to remove existing CCA treated structures illustrates it is not seen as dangerous.
- CCA continues to be approved for the majority of outdoor uses i.e. deck structures, pergolas, fencing, landscaping, vege gardens.
- However they did take a precautionary approach and restricted CCA treated timber being used in certain applications.

H2-F Information

- H2 LOSP treated timber has been used in Australia since the 1990's to protect house framing from termites.
- In 2004 pine manufacturers launched a new type of treatment – blue pine framing or H2-F.
- Blue pine framing offers:
  - A more cost effective option to H2 LOSP
  - Better supply to service the increasing demand for termite resistant framing
  - Same 25-year performance guarantee as LOSP treated timber
- Treated to and H2F level so suitable for **internal** framing applications. Can't be used in external applications.
- It has been dyed blue to make it easy to distinguish from untreated framing.
- H2-F is suitable for use south of the Tropic of Capricorn.

© Copyright FWPA. Published by TABMA 01/09

Hazard Levels

The right treatment level for the job is determined by the environmental hazards the timber will be exposed to, for example, timber in a garden wall will be exposed to dampness from being in contact with the ground therefore it needs to be treated to at least an H4 level.

	Hazard Type	Situation	Typical Uses	Typical Treatments
H1	Lyctid borers	**Inside**, above ground	Framing: Roof trusses, beams, interior battens, flooring,	LOSP
H2	Insect borers and termites	**Inside**, above ground.	Framing: Roof trusses, beams, interior battens, flooring,	LOSP
H2-F	Termites, insects and borers	**Inside**, above ground. For use south of the Tropic of Capricorn.	Framing: Trusses, roof timber, flooring	Envelope treatment Bifenthrin, Permethin
H3	Moderate fungal decay and termites	**Outside**, above ground	Weatherboard, fascia, pergolas (above ground), window joinery, decking boards, bearers and joists	CCA, ACQ, LOSP, TAN E
H4	Severe fungal decay, borers and termites	**Outside**, in-ground	Fence posts, greenhouses, pergolas (in ground) and landscaping timbers	CCA, ACQ, TAN E
H5	Very severe fungal decay, borers and termites	**Outside**, in-ground. Contact with or in fresh water	Retaining walls, piling, house stumps, building poles, cooling tower fill	CCA, ACQ
H6	Marine borers and decay	Northern and southern marine waters	Boat hulls, marine piles, jetty cross-bracing, landing steps	CCA

© Copyright FWPA. Published by TABMA 01/09

Glossary of Terms Extracted from Australian Timbers Publication

Air-dried	Dried in a natural atmosphere.
Air-dry	Having a moisture content in equilibrium with the local atmosphere. The equilibrium moisture content varies with seasons and climates.
Board	A piece of sawn, hewn or dressed timber of greater width than thickness. The manufactured product supplied as a rigid sheet.
Checks or splits	Separations which extend along the grain, the result of moisture loss and shrinking during drying.
Clear timber	Timber free of any imperfections.
Conifer	A tree belonging to the order Coniferales of the botanical group Gymnospermae, typically bearing cones and carrying needle-shape or scale-like leaves. Conifers are usually evergreen and produce timber known commercially as softwood.
Conventional milling	Where the log or flitch is passed over the sawbench.
Cubic Metres	Is a measure of volume calculated by multiplying the thickness by the width by the linear length of timber. All dimension in metres.
Cup	Where the timber bends, most common on back-sawn boards and where a concave curvature across the grain occurs.
DAR	Timber that has been dressed all round ie on all surfaces.
Decay	Decomposition of wood by fungi.
Density	One of the measures for the structural and mechanical properties of timber expressed as weight per unit volume, e.g. in kilograms per cubic metre.
Dressed timber	Timber finished to a smooth surface on one or more surfaces.
Drying	Where moisture is evaporated or extracted from timber. Rate of drying has a major effect on the quality and quantity of the timber recovered.
Durability	A standard classification for species as to the length of time the timber will last in the ground or be exposed to the weather before decay takes place and the timber loses its structural strength.
E/M	End Matched boards that have T&G on the end as well.
End split	A split at the end of a piece of timber or a log.

© Copyright FWPA. Published by TABMA 01/09

Glossary of Timber Terms (cont.)

Face	The wide surface of a square-sawn, hewn or dressed timber, veneer, plywood, on which the grade or quality is judged.
F Grades:	A stress grade of timber for which the specific suite of design properties is given by Australian Standard AS1720.1.
Figure	The appearance of a wood surface due to its anatomical features, such as grain or texture, or variation in colour.
Finished Size	The actual dimension of a piece of timber after it has been dressed.
FJ	Finger Jointed timber comprises lengths of timber joined end to end utilizing a micro-sized finger (joint) employing an adhesive whose strength and potential overall length is increased through the glue-bonds.
Flitch	A section of timber which has been sawn from a log.
Flooring	Boards prepared for use in flooring by machining to a standard thickness and usually profiling a tongue along one edge and a matching groove along the other edge.
Framing timber	Timber used to form the basic structure of a building.
Gauged	Timber with a smooth, even surface that has been dressed to a precise size.
Grain	The general direction of the fibres or wood elements relative to the main axis of the piece. Grain may be cross, diagonal, interlocking, spiral or straight.
Green timber	Colloquial term for timber which is newly cut and still has a high moisture content. Technically known as unseasoned timber.
Growth ring	A ring sometimes visible on the cross-section of a trunk or branch marking a (usually annual) cycle of growth. It is visible because of the conspicuous difference between its latewood portion and its earlywood portion.
Gum veins or pockets	Gum production is a natural protection response to injury especially in hardwoods and eucalyptus. The presence of pockets of gum can reduce the strength of timber.
Hardwood	Technically, hardwoods are woods from trees classed as 'flowering' plants as opposed to conifers. The timber of conifers is known as softwood. Some 'hardwoods' such as balsa are soft; some 'softwoods' such as yew are very hard.
Heartwood	The mature part of timber in a tree the inner zone of dead wood. It provides the structural support for the plant. Its cells contain tannins, phenols and other substances, many of which inhibit fungal activity and render heartwood more durable than sapwood.
Interlocking grain	In timber, where a double spiral effect is caused by the alternate bands of growth having their fibres oriented in opposite directions.

© Copyright FWPA. Published by TABMA 01/09

Joint group	The structural use of the timber in the Timber Engineering Structures Standard, and the Residential Timber Framed Construction Standard.
Kerf	A saw cut.
Kiln	A chamber used for drying timber, in which the temperature and humidity of the circulating air can be suitably controlled.
Kiln dried	Of timber, seasoned in a kiln usually to a specified or selected moisture content.
Knot	A section of a branch which is embedded in the wood of a tree trunk or of a large branch. It may be 'live' or 'dead'; in the latter case, it may be loose.
Linear Metres	Is a measure of length that ignores the thickness and width of a piece of timber.
Lyctids	'Powderpost' beetles. The larvae of these borer beetles which attack the starch-containing sapwood of certain hardwood species, reducing it to a fine flour-like powder. They do not attack the heartwood and they cannot attack softwood timber at all. The commonest species in eastern Australia is Lyctus brunneus.
Milled timber	Timber produced from a log which has been sawn.
MGP	Determines the stress grade of Pine by mechanical methods.
Moisture content	A measure of the available water in a piece of timber. Wood normally increases in strength with drying.
Nominal Size	The sawn size of a piece of timber before the timber is dressed. The nominal size is greater than the actual or finished dimension.
Quarter-sawing	Where the log is turned to produce boards at a right angle to the grain. Used to produce boards of high-strength quality or where the figure is to be exposed.
Resin	A sticky exudates produced in specialised microscopic structures called resin ducts in conifer timber, although also in some 'hardwood' families such as the Dipterocarpaceae.
Rough sawn	Surface condition of wood as it leaves the saw.
Rougher Headed	Timber that is dressed down with a fine rippled finish.
Sapwood	The living, immature outer wood of a tree. As its inner layers die they become heartwood.
Sawn	Timber that has not been gauged or dressed.
Scantling	Timber of small rectangular or square cross-section used in construction, such as rafters.

© Copyright FWPA. Published by TABMA 01/09

Glossary of Timber Terms (cont.)

Seasoned timber	Timber dried to a stable moisture content of 10 to 15%.
Shrinkage	The dimensional difference between green timber and timber dried to a moisture content of 12%, normally given as a percentage of shrinkage of the radial and tangential faces of a piece of timber.
Softwood	A wood, regardless of weight and hardness, which comes form a coniferous tree.
Species	The basic unit of biological classification. With rare exceptions, a species may be defined as an interbreeding group of biological organisms, that is isolated reproductively from all other organisms.
Strength Groups	S = unseasoned. There are seven groups ranging downward from S1 to S7. SD = seasoned. There are eight groups ranging downward from SD1 to D8.
Stress grade	A means of grading a piece of timber for structural purposed by means of visual or mechanical methods. Primarily it is used to indicate the basic working stress in bending, to assist in design structure and, by implication, the basic working stresses for other properties used in engineering design.
Strip	A small piece of sawn or dressed timber of rectangular or squared cross-section intended to separate boards in a seasoning stack.
Structural timber	Timber selected for applications where strength is essential, as in building construction.
T&G	Tongue & Grooved flooring where boards are joined along the length, one with a tongue and the other with a groove.
Termites	Insects belonging to the order Isoptera; they are very active destroyers of woody material in the tropical and subtropical zones of the world.
Timber	Milled wood in a form suitable for construction or carpentry or joinery or for reconversion for manufacturing purposes.
TopNail & Secret Nail	Some species and board widths of T&G flooring are offered in a choice of top nail or secret nail profiles. As the name describes, top nail boards are installed with nails through the top surface, while secret nail profiles are installed with nails through the tongue, and are thus hidden by the adjoining board.
Trade name	Commercial trading name for a specific timber. It may or may not differ from the common name used by foresters and the lay public.
Truewood	Another name for heartwood.
Unseasoned timber	Timber which is newly cut and still has a high moisture content.

© Copyright FWPA. Published by TABMA 01/09

Timber Durability

The classification system is based on the assumption that the timber being dealth with is untreated, sound, mature heartwood of reasonable dimensions (at least 40 mm in thickness), used in ground contact unprotected from subterranean termite attack.

Class 1 Timbers of the highest natural durability which may be expected to resist both decay and termite attack for at least 25 years and up to 50 years.

Class 2 Timbers of high natural durability which may be expected to haave a life of 15 to 25 years.

Class 3 Timbers of only moderate durability which may be expected to have a life of 8 to 15 years

Class 4 Timbers of low durability which may last 1 to 8 years. These timbers have about the same durability as untreated sapwood, which is regarded as Class 4, irrespective of species.

Refer Australian Standard AS 5604 – 2005

© Copyright FWPA. Published by TABMA 01/09

Timber in Bushfire Prone Areas

In many parts of Australia, the construction of new buildings and additions to existing buildings will be assessed as being in a Bushfire Prone Area. The relevant Australian Standard -- AS 3959 -- provides for a range of Bushfire Attack Levels for proposed construction. Each Level is based on the assessed threat and as the assessed threat increases, so do the restrictions on the building materials that may be used. Where there are restrictions on the building materials, timber is permitted in the lower levels provided the timber species meets certain criteria.

There are 2 main criteria:

- For some applications, AS 3959 indicates that there are no requirements or permits the use of timber. For such applications any timber may be used (where appropriate) provided that the timber meets the requirements of all the other standards and codes that apply to the construction.
- For some applications, AS 3959 restricts the use of timber to a fire-retardant-treated timber. However, the Standard does provide that some timber species are capable of meeting the required parameters (for resisting fire) without having to be subjected to fire retardant treatment. Again, the timber used must meet the requirements of all the other standards and codes that apply to the construction.

The following timber species have been tested and found to meet the required parameters without having to be subjected to fire retardant treatment:

• Blackbutt	• River Red Gum	• Spotted Gum
• Merbau	• Silvertop Ash	• Turpentine
• Red Ironbark		

It should be noted that AS 3959 does not replace any other standards which might set out minimum requirements for construction in a particular area but rather AS 3959 sets out requirements which are dependent upon the degree of assessed threat of Bushfire Attack and which are additional to the requirements of those other standards.

Further Information

The external use of building materials in houses built in declared bushfire prone areas is controlled under the Building Code of Australia (BCA) Parts P2.3.4 and 3.7.4. Before the BCA requirements apply, the local authority must declare the area, in which a house is to be built, to be a bushfire prone area.

Compliance with Australian Standard AS 3959 Construction of Buildings in Bushfire Prone Areas is 'deemed to satisfy' the BCA requirements for Class 1 Buildings.

Amendments to the Standard were incorporated into the BCA in July 2001. The amended Standard includes new criteria for the performance of timber used externally. While some timber e.g. high density and in larger sizes, will meet these performance requirements, testing is needed to confirm compliance. Testing of fire retardant treated and untreated timber has commenced, including accelerated weathering which is required prior to fire testing.

Some testing has been completed, confirming that a number of non-fire retardant treated timbers comply with the performance requirements.

Testing protocols for building materials and configuration to required performance levels are available in a report on the *Suitability of Untreated Timbers for Building in Bushfire-Prone Areas* (PDF, 0.1 MB) from Warrington Fire Research (Aust) Pty Ltd.

© Copyright FWPA. Published by TABMA 01/09

Hardness

VS (very soft)	=	480 kg/m^3 or less
S (soft)	=	485 – 560 kg/m^3
F (firm)	=	565 – 680 kg/m^3
M (moderately hard)	=	685 – 800 kg/m^3
H (hard)	=	805 – 960 kg/m^3
VH (very hard)	=	965 kg/m^3 or more

Strength Groups

S = unseasoned.
There are seven groups ranging downward from S1 to S7.

SD = seasoned.
There are eight groups ranging downward from SD1 to SD8.

Joint Groups

There are six groups ranging downward from 1 to 6; they indicate mechanical properties for jointing purposes in engineering design

© Copyright FWPA. Published by TABMA 01/09

WOOD
NATURALLY BETTER

Supplied by

Published by the Timber and Building Materials Association (Aust) Limited
ABN 12 000 045 956
Suite 603, Level 6, 486 Pacific Highway, St Leonards, NSW 2065 Australia
PO Box 518, St Leonards NSW 1590 Australia
Telephone (02) 9277 3100 Fax (02) 9437 1222

© Copyright

Forest&Wood Products Australia
Knowledge for a sustainable Australia

TABMA
QUALITY • SERVICE • INTEGRITY